FUTURE ELECTRONICS

FTM

NPI's, DESIGN & TECHNOLOGY NEWS

23-vi
Security & Encryption

Hardware security module offers easy way to securely deploy IoT devices to cloud at scale

Infineon has combined the OPTIGA Trust M Express with its cloud services for registering and provisioning IoT devices to provide a complete, off-the-shelf solution for securing the cloud connections of an entire fleet of products.

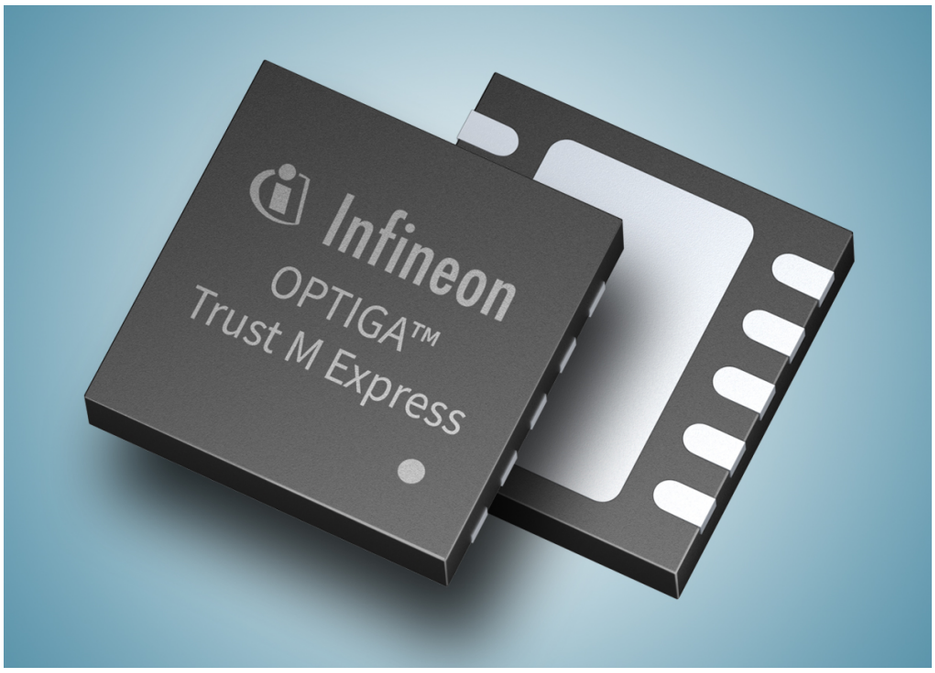

Infineon supplies a complete, integrated system for securing an IoT device's connection to the cloud, providing both a secure hardware root-of-trust capability and a complete registration and provisioning service that can be deployed in high volume across a fleet of devices.

The system combines the OPTIGA™ Trust M Express, a hardware security module, and the Infineon cloud provisioning service.

The OPTIGA Trust M Express security chip provides hardware-based security for IoT devices from manufacturing, through cloud provisioning, to field deployment. The encrypted identity of each OPTIGA Trust M Express chip is programmed in a certified secure Infineon fabrication plant. Benefiting from strong security protection, demonstrated by Common Criteria Evaluation Assurance Level (EAL) 6+ security approval, the OPTIGA Trust M Express is protected from exposure at any stage during the host product's lifetime.

The cloud ID service automates both IoT device certificate registration and the provisioning of the device in the cloud at scale. The OPTIGA Trust M Express is supplied pre-provisioned with ready-to-use certificates and keys for AWS multi-account registration, and for Azure IoT Hub pre-registration.

This complete, off-the-shelf solution for IoT device security from Infineon eliminates the need for OEMs to build and maintain secure manufacturing facilities for device personalization, allowing them to simplify their production flow, accelerate time-to-market, and reduce cost.

Infineon

FEATURES

- Security capabilities:
  - ECC cryptography, NIST curves up to P-521
  - Brainpool r1 curve up to 512 bits
  - RSA cryptography with keys up to 2,048 bits
  - AES cryptography with key up to 256 bits
  - HMAC cryptography up to SHA-512
  - TLS v1.2 PRF
  - HKDF up to SHA-512
  - True/digital random number generators
- 16-bit CPU core
- 10 kbyte non-volatile memory
- I2C interface

APPLICATIONS

- Smart cities
  - Street lights
- Smart mobility
  - Electric vehicle chargers
  - E-scooters
- Commercial HVAC systems
- Smart home equipment
  - Residential air-conditioning systems
  - Large home appliances
- Industrial IoT devices
- Connected healthcare equipment

FREE DEV BOARD

Easy-to-use kit uses OPTIGA Trust M for IoT device security.

Orderable Part Number
TRUSTMIOTSDKTOBO1

APPLY HERE NOW

BUY NOW | INFORMATION | DATASHEET | SAMPLES

ENERGY | INDUSTRIAL | LIGHTING | MEDICAL | TRANSPORT | SECURITY | CONSUMER | TELECOMS

Secure element provides certified solution for asset identification and brand protection

The STMicroelectronics STSAFE-A110 implements a rich set of security functions to provide strong protection for secure keys, a unique identification and X.509 certificates. ST supports customers with secure provisioning of STSAFE devices.

The STSAFE-A110 from STMicroelectronics, part of its STSAFE family of secure elements, enables OEMs to prevent the counterfeiting of genuine products by strictly assuring their authenticity.

The STSAFE-A110 secure element offers state-of-the-art certified protection, and access to secure cloud credentials. This enables device manufacturers to perform mass registration of IoT devices while ensuring that only authorized devices can access online services. This personalization process can be performed at a secure ST factory, simplifying and protecting the handling of secret data in the production of IoT devices.

The STSAFE-A110 includes a secure operating system, and is based on hardware which is certified to Common Criteria Evaluation Assurance Level 5+ (EAL5+). Each unit comes with a unique identification and X.509 certificates, aiding secure connection of IoT devices to cloud computing platforms and other networked services.

Like all the STSAFE products, this secure element includes the most robust technologies for resisting attempts to eavesdrop on, steal, tamper with or corrupt private data. The STSAFE-A110 security features include:

- Secure channel establishment with remote host including transport layer security (TLS) handshake
- Signature verification service for secure boot and firmware upgrades
- Usage monitoring with secure counters
- Pairing and secure channel establishment with a host applications processor
- Wrapping and unwrapping of local host envelopes
- Symmetric data encryption or decryption with up to 16 keys
- On-chip key pair generation

The STSAFE-A110 also performs advanced asymmetric cryptography using ECC, ECDSA or ECDH protocols, and symmetric cryptography with protection against logical and physical attacks.

The STSAFE-A110 is integrated with the STM32Cube development ecosystem, so that it can be quickly incorporated in new designs based on an STM32 microcontroller.

life.augmented

FEATURES

- Unique serial number on each die
- Active shield against physical intrusion
- Protection against side-channel attacks
- 6 kbytes of configurable non-volatile memory
- I2C interface

APPLICATIONS

- Consumables
- IoT devices
- Smart home products
- Smart city products
- Accessories
- Power-tool batteries
- Battery chargers
- Vending machines
- Farm machinery
- Environmental sensors

FREE DEV BOARD

Expansion board for STSAFE-A110 secure element.

APPLY HERE NOW

BUY NOW | INFORMATION | MORE INFO | DATASHEET | SAMPLES

ENERGY | INDUSTRIAL | LIGHTING | MEDICAL | TRANSPORT | SECURITY | CONSUMER | TELECOMS

New general-purpose CoB LEDs compatible with common optics and other components

With the launch of the LUXEON CS CoB LED series, Lumileds now supports all three of the CoB board footprints that are widely used by the lighting industry.

LUMILEDS

FEATURES

- Superior color stability
- Low thermal resistance
- Comprehensive optical, mechanical, and electrical ecosystem

APPLICATIONS

- Track lights
- Downlights
- Spotlights
- High-bay lighting
- Low-bay lighting

Lumileds has expanded its range of chip-on-board (CoB) LEDs to support all three of the board formats that are widely adopted by lighting equipment manufacturers.

The LED industry has not specified standard footprints or boards sizes for CoB LEDs, unlike for other types of LEDs. Nevertheless, the ecosystem of suppliers of components such as CoB holders and optics have largely designed their products to support three common board formats. The introduction of the new LUXEON CS series means that Lumileds now offers LUXEON CoB LEDs in a 13.5 mm x 13.5 mm footprint, as well as the 19.0mm x 19.0mm and 28.0 mm x 28.0 mm sizes.

Now lighting equipment manufacturers can select LUXEON CoB LEDs as drop-in replacements for other models, without having to redesign their board. In doing so, they will benefit from the excellent efficacy, color stability, and reliability of LUXEON CoB LEDs.

The new LUXEON CS CoB products are general-purpose LEDs which match the performance of the existing Lumileds LUXEON Core and LUXEON CX CoB LEDs. They are available in color temperature options of 2700 K, 3000 K, 3500 K, 4000 K, 5000 K, 5700 K and 6500 K, and with a minimum CRI of 80 or 90.

The LUXEON CS Pro CoB LEDs are spectrally tuned for retail lighting, illuminating merchandise with a brighter and sharper light.

The LUXEON CS HE LEDs offer very high efficacy.

Product	Footprint for 6 mm LES*	Footprint for 9 mm LES	Footprint for 13 mm LES	Footprint for 15 mm LES	Footprint for 22 mm LES
LUXEON CS	13.5 mm x 13.5 mm	13.5 mm x 13.5 mm	19.0 mm x 19.0 mm	19.0 mm x 19.0 mm	28.0 mm x 28.0 mm
LUXEON CS Pro				19.0 mm x 19.0 mm	28.0 mm x 28.0 mm
LUXEON CS HE				19.0 mm x 19.0 mm	28.0 mm x 28.0 mm

*LES = Light Emitting Surface

Crystal oscillators with ultra low-jitter enable accurate timing in high-performance computing and communications

UF series oscillators from Diodes Incorporated provide clean frequency outputs up to 212.5 MHz, ideal for systems transferring signals over high-speed interfaces such as PCIe 5.0.

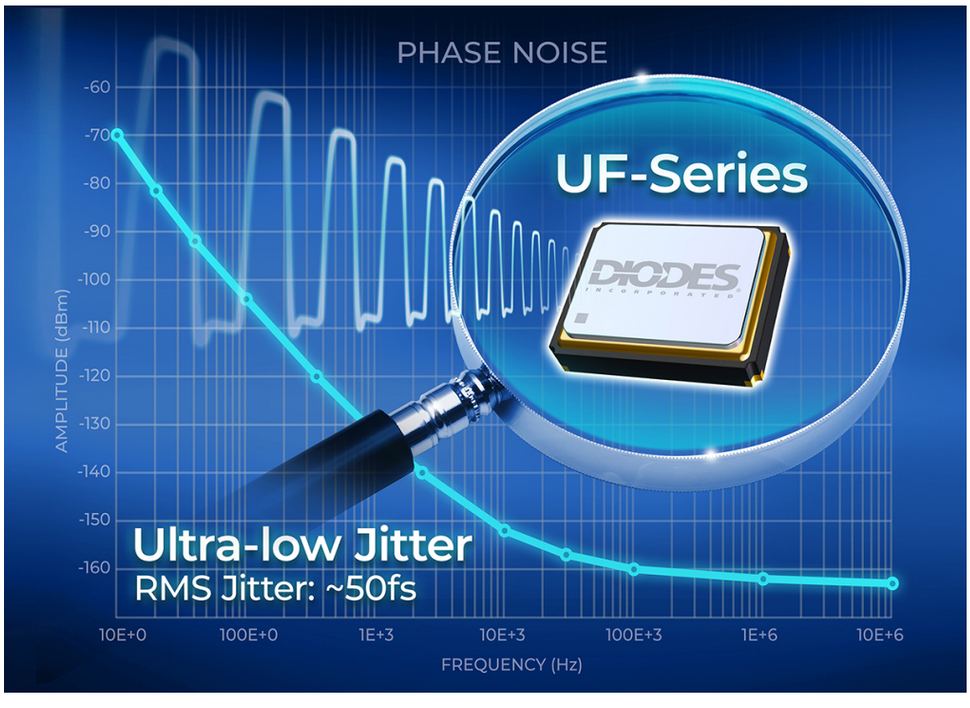

DIODES INCORPORATED

FEATURES

- Temperature stability as low as 25 ppm
- Operating-temperature range: -40°C to 125°C
- Supply-voltage options: 2.5 V or 3.3 V

APPLICATIONS

- Optical communications modules
- Networking equipment
- Test and measurement equipment
- Servers
- Storage systems
- Professional video equipment

The DIODES™ UF series of miniature crystal oscillators (XOs) from Diodes Incorporated provides the ultra low-jitter required in the most demanding applications for high-performance computing and networking equipment.

The rms jitter specification of UF series XOs is as low as 50 fs, giving equipment designers a wide margin in their timing error budget. Frequency outputs range from 100 MHz to 212.5 MHz.

The UF series XOs are ideal for use in equipment communicating through high-speed interfaces such as 112G Ethernet and PCI Express (PCIe) 5.0. The XOs can also provide the timing signal for FPGA or ASIC reference clock generators.

The UF series oscillators are supplied in a range of packages that have an industry-standard footprint, the smallest is 2.5 mm x 2.0 mm. The devices offer various output options: LVPECL, LVDS, and HCSL.

Automotive-grade variants qualified to AEC-Q104 are available.

Diodes is a trademark of Diodes Incorporated in the United States and other countries

INFORMATION | DATASHEET | DATASHEET #2

SAMPLES

ENERGY INDUSTRIAL LIGHTING MEDICAL TRANSPORT SECURITY CONSUMER TELECOMS

Low-profile wire-to-board connectors ideal for space-constrained designs

DF58 series connectors from Hirose offer a current rating of up to 3 A for use in power-supply circuits. They provide highly reliable mating operations and secure connections.

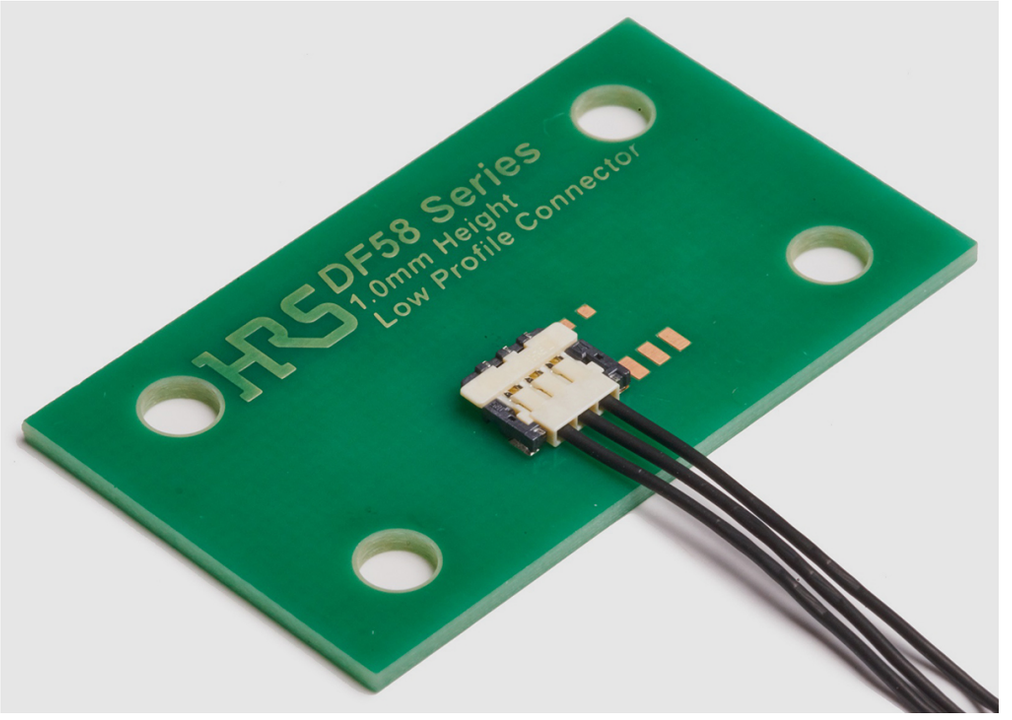

HIROSE ELECTRIC EUROPE B.V.

FEATURES

- Contact positions: 2, 3, 4, 6
- 1.2 mm contact pitch
- 100 V ac/dc voltage rating
- Rated for 10 mating cycles
- Cable-size range: AWG 28 to 30

APPLICATIONS

- Wearable devices
- Service robots
- Drones
- Medical devices
- Point-of-sale equipment
- Digital cameras
- Small portable devices

The DF58 series of wire-to-board connectors from Hirose save space and reduce height in wearable, portable and other space-constrained designs. The series consists of crimp sockets and headers in a single row.

The mated height profile is just 1.0 mm. Depth of 4.97 mm reduces the space needed to assemble the connector on the board, yet the DF58 still provides a long effective mating length of 0.29 mm.

Despite the DF58's small size, a high current rating of 3 A, which is feasible with the two-contact version and 28 AWG cable, support power-supply applications.

The Vertical-insertion Swing-extraction (ViSe) double-locking mechanism provides for secure connections. The crimp socket is mated to the header in a vertical direction, but is guided in at an angle to engage with the positive lock. This ensures high retention force in the upper direction, and prevents the cables from being easily disconnected. The friction lock prevents incomplete locking and floating after mating.

Highly reliable two-point clipping contacts stabilize contact resistance and minimize the rise in temperature in operation.

FUTURE ELECTRONICS FTM NPIs, DESIGN AND TECHNOLOGY NEWS

Bidirectional topologies for fast charging of EVs: options to optimize for size, power, cost or simplicity

By Riccardo Collura
EMEA Vertical Segment Manager (Power), Future Electronics

Read this to find out about:

- Why new dc charger designs have to contend with the challenges of power density and thermal management
- The advantages and drawbacks of various topologies for implementing the PFC and dc-dc converter stages
- How reference designs from SiC MOSFET manufacturers provide a fast start for power-system designers who are developing new dc charger designs

Dc fast chargers for electric vehicles (EVs) under development now have to meet a more demanding set of specifications than today's installed base of chargers. This high requirement stems from two market pressures: first, to provide for faster charging of the higher-capacity batteries embedded in the latest EVs. And second, to enable bidirectional power flow, supporting new vehicle-to-grid (V2G) and vehicle-to-building (V2B) applications, technology that will help to balance the power grid as more energy is generated from fluctuating sources such as wind and solar power.

Charger manufacturers can build flexibility into their designs by implementing dc fast chargers as modular building blocks: multiple modules can be connected in parallel to scale up the power output to as high as 300 kW. This means that when multiple modules are stacked in a charger's enclosure, the power density of the module becomes a key issue, as does thermal management.

In answer to these challenges, EV charger manufacturers have turned to silicon carbide (SiC) power switches, which can switch faster than equivalent silicon MOSFETs or IGBTs with much lower switching losses: this enables the use of smaller magnetic components, resulting in higher system power density. SiC technology also provides an answer to the thermal problems of high-density power designs, because of its higher efficiency and toleration of higher operating temperatures than silicon devices, enabling the use of a smaller heat-sink while reducing thermal stress on the system's components.

There are today few semiconductor manufacturers with the technical capability and manufacturing capacity to supply SiC devices in volume to charger manufacturers: leading the group are Infineon, onsemi and STMicroelectronics. Many EV charger designers will therefore look to these companies to provide the reference design boards with which they can evaluate the performance of various SiC power switches, and assess their suitability for their application.

These reference designs provide implementations of some of the most appropriate topologies for bidirectional dc fast chargers, both at the PFC stage and the dc-dc converter stage. An understanding of these topologies, and their benefits and drawbacks, will help the designer to work out which best fits the requirements of their application. Let's look first at the choice of topologies for an EV charger's active front-end PFC stage.

Active front-end PFC stage of a dc charger module

The ac-dc stage converts a normally three-phase input in the range 380 V to 415 V ac into a stable dc link voltage of around 800 V. All the topologies examined in this article are for bidirectional systems, so the conversion will also go the other way, from dc to ac.

SiC devices are particularly well suited to bidirectional converters, which are based on a half-bridge configuration. Usually bidirectional systems perform repetitive hard commutation: in this case, a silicon power switch's long reverse-recovery time at the device's body diode will lead to high power dissipation and low efficiency, as well as higher thermal stress and lower system reliability. So a bidirectional converter requires low or even zero reverse-recovery time, a feature of SiC MOSFETs, as shown in Figure 1.

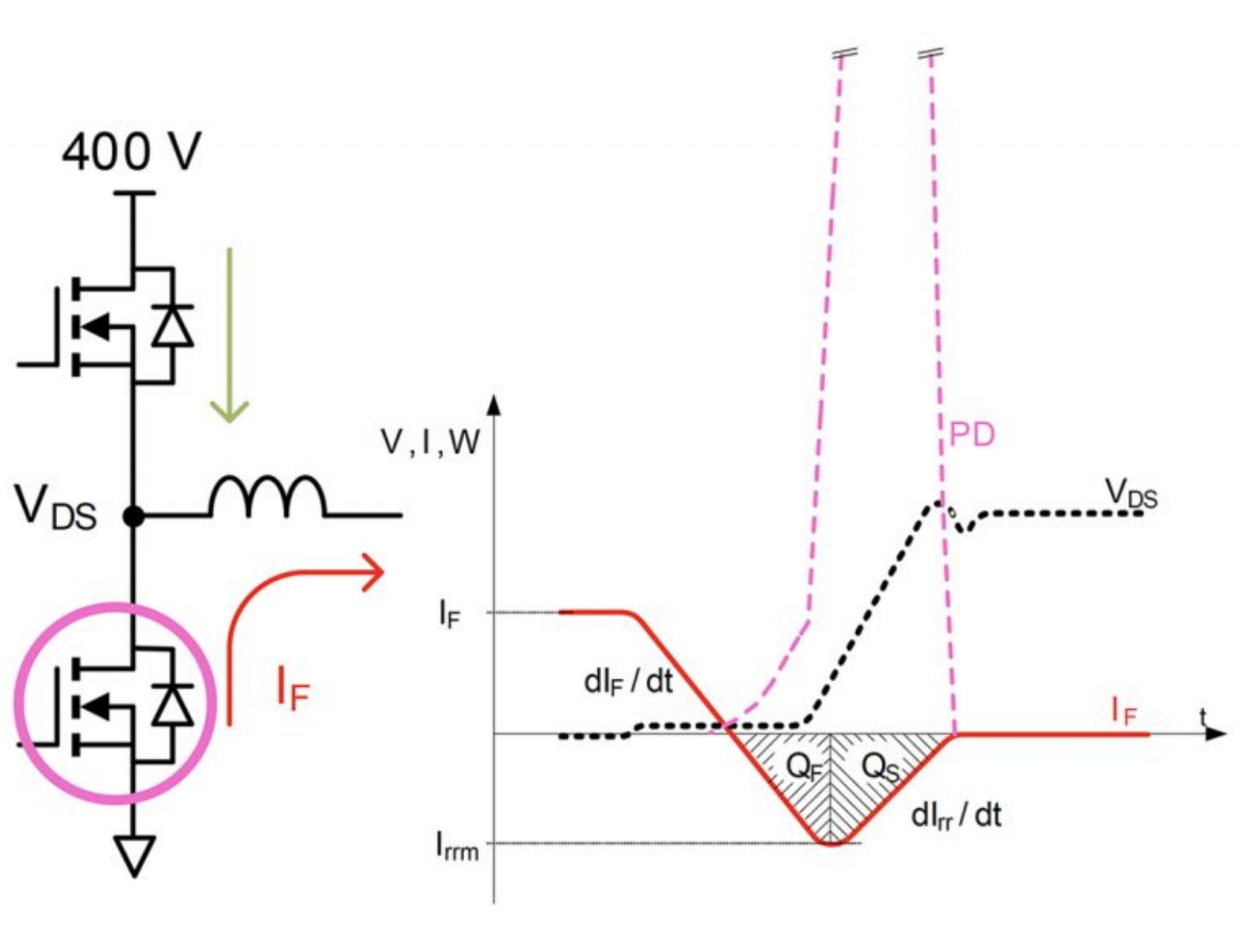

Fig. 1: Low body diode reverse-recovery time is essential in bidirectional converters, which have a half-bridge configuration and are exposed to repetitive hard commutation

There are three topologies worth considering for the active front-end PFC stage of three-phase bidirectional dc chargers:

- Two-level PFC
- Three-level neutral point clamped (NPC)/active NPC (ANPC)
- Three-level T-type NPC

Two-level PFC topology

The six-switch boost-type rectifier of the two-level PFC topology is a very simple circuit that is easy to control, and shown in Figure 2. It facilitates bidirectional power flow and can achieve a high power factor with reasonable efficiency. Compared to a three-level topology, it has a lower component count and an easier PCB layout.

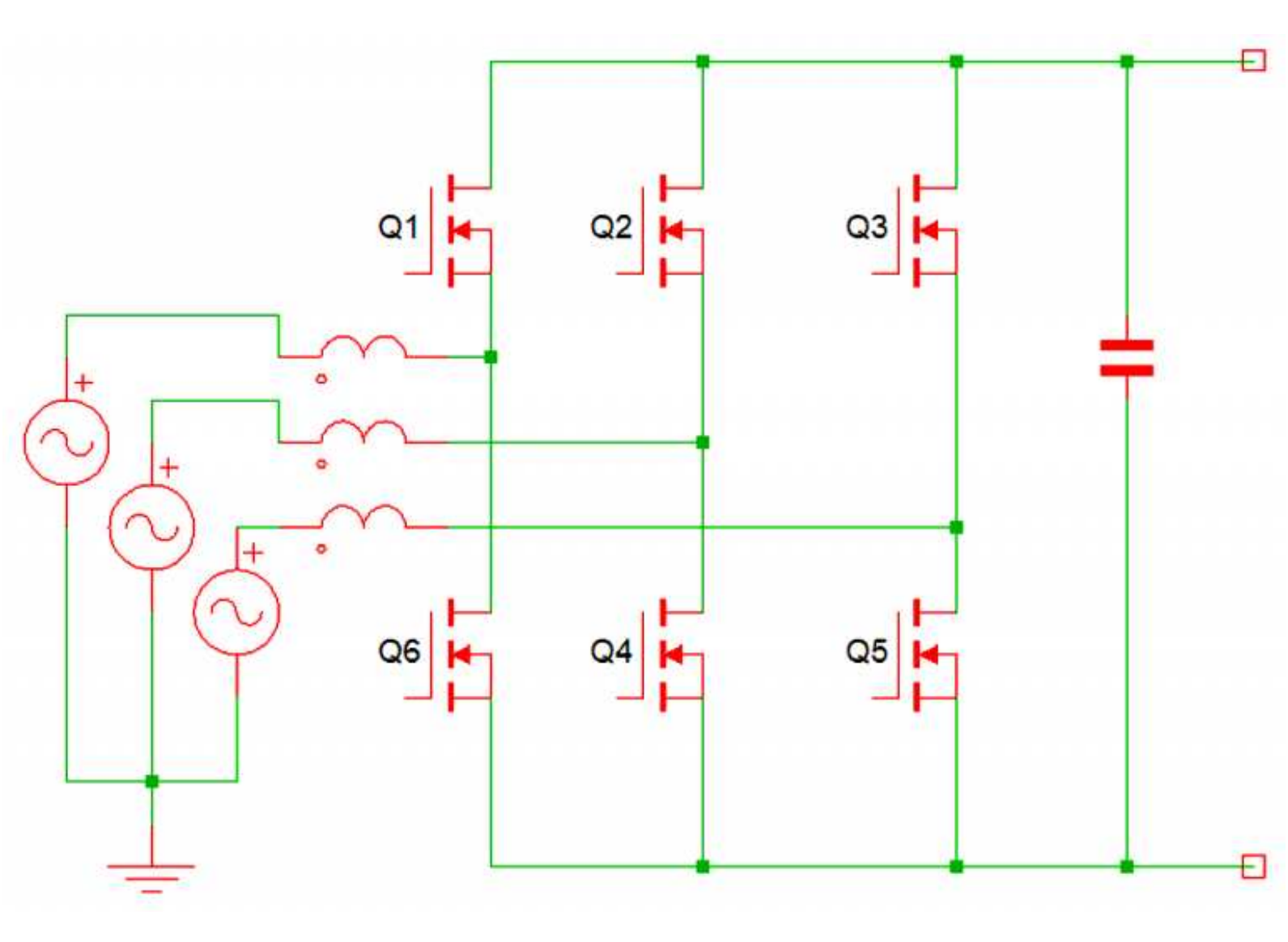

Fig. 2: The two-level PFC topology

On the other hand, it requires switches with a high voltage rating to block the entire dc link voltage. For example, in an 800 V dc application, a SiC MOSFET with a 1,200 V blocking capacity is required.

An additional drawback of this topology is the bulky filter inductor, which is required to minimize the total harmonic distortion (THD) at the input current. Three-level topologies, which do not require so much inductance, enable lower power density. Another factor to consider is the high peak-voltage stress, which compromises the lifetime of the semiconductor and other passive devices.

Finally, the converter's EMI performance is substantially lower than that of the multi-level PFC topologies described below.

Three-level NPC/ANPC PFC topology

In the three-level NPC/ANPC topology, each switch only needs to be capable of blocking half the bus voltage, so MOSFETs with a lower voltage rating can be used, and the voltage stress on devices is much lower, as shown in Figure 3. This means that this topology can be easily scaled across multiple platforms for implementation with SiC, GaN and silicon power switches to meet the needs of applications with different power, cost and efficiency requirements.

In an 800 V application, 600 V-rated MOSFETs may be used. As well as offering lower switching losses than 1,200 V MOSFETs, 600 V MOSFETs can support much faster switching frequencies.

In the NPC topology, lower ripple is observed in the output current, and the output-voltage transient is 50% lower. This reduces the requirement for filtering and isolation, and allows for the use of a smaller filter inductor. With less inductance needed to regulate THD in the current waveform, the design can achieve higher power density. This multi-level converter topology's output voltages also suffer very low disturbance, which minimizes the dv/dt stresses across devices, and improves EMI performance.

While the NPC topology offers lower switching losses and higher efficiency at switching frequencies above 50 kHz than the two-level PFC, it does require more switches, and each switch needs its own gate-drive circuit. This means that control is more complex, and the bill-of-materials (BoM) cost is higher.

In addition, this topology uses both active semiconductor switches and diodes, and the resulting asymmetrical distribution of losses across the power stage can make thermal management difficult. Some designers prefer a more symmetrical distribution of losses, so replace the diodes of the NPC topology with active switches in an ANPC converter, as shown in Figure 4.

It is useful in both NPC and ANPC topologies that the reduced blocking voltage across all switches means that high-efficiency gallium nitride (GaN) switches can be used to improve efficiency and power density.

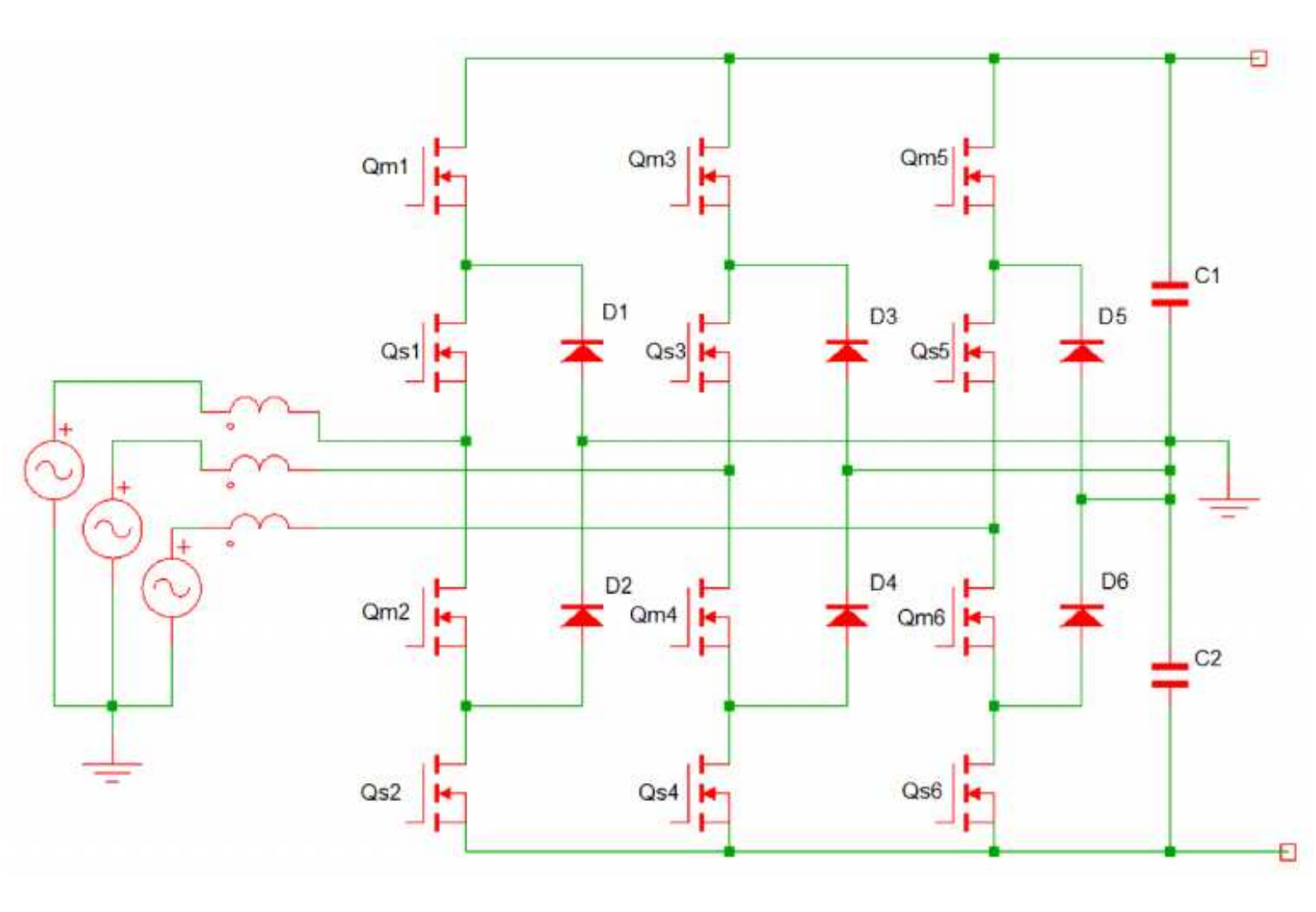

Fig. 3: Three-level NPC PFC topology

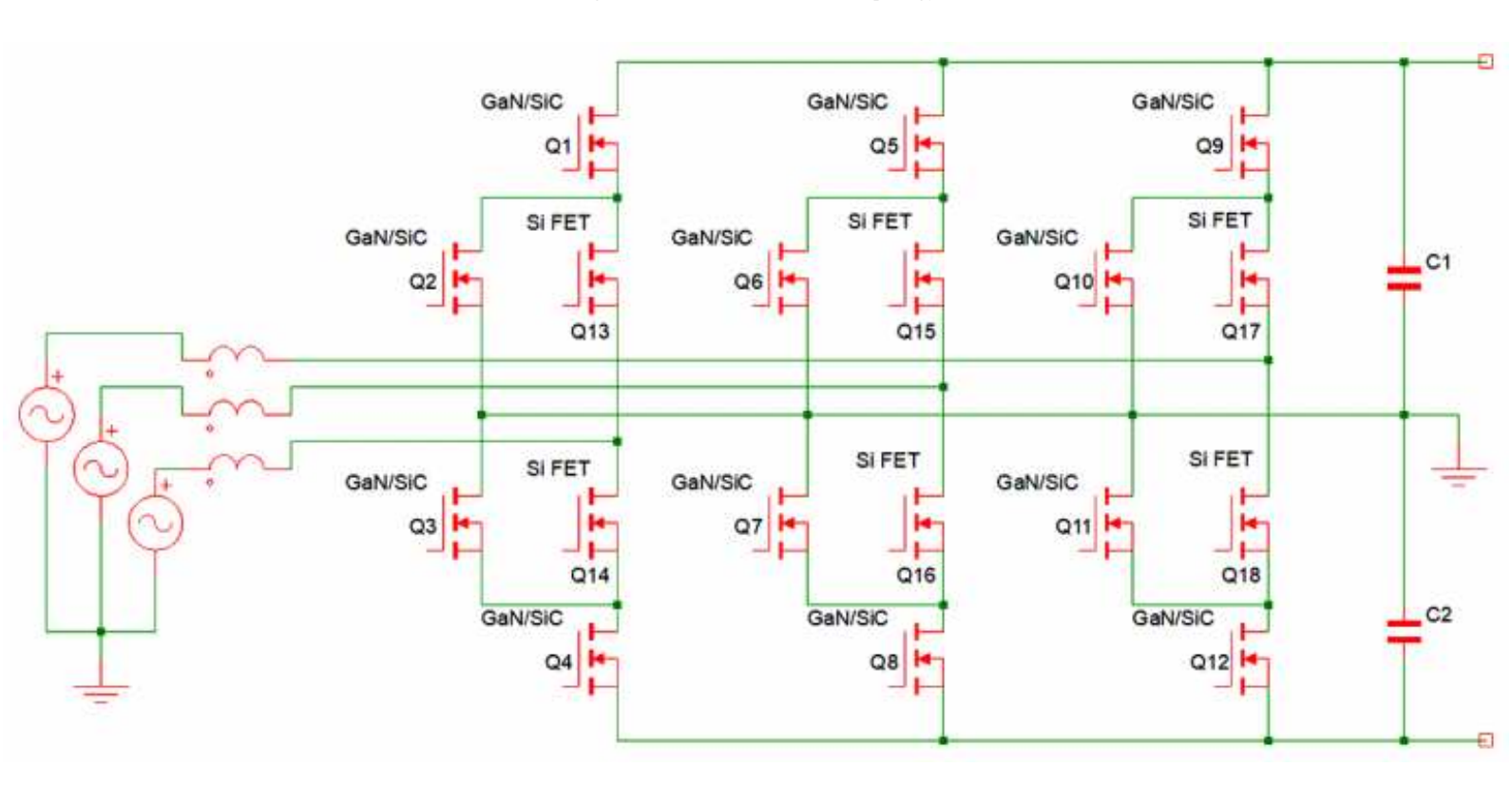

Fig. 4: Three-level ANPC PFC topology

Three-level T-type NPC PFC topology

In three-level T-type NPC PFC converters, the conventional two-level voltage source converter topology is extended with an active, bidirectional switch to the dc link midpoint, shown in Figure 5. For 800 V dc link voltages, 1,200 V IGBTs/diodes would normally operate on the high and low sides on each phase, as the full voltage has to be blocked. But in the T-type configuration, the bidirectional switch to the dc link midpoint only needs to block half of the voltage. This means it can be implemented with lower-voltage devices, for example two 600 V IGBTs that include antiparallel diodes.

Due to the reduced blocking voltage, the middle switch generates very low switching losses and acceptable conduction loss. Unlike the three-level NPC topology, the T-type NPC topology does not connect devices in series that must block the whole dc link voltage.

In the NPC topology, switching transitions made directly from a positive to a negative dc link voltage, and vice versa, are usually avoided, as they might cause an uneven share of the voltage to be blocked momentarily when both FETs connected in series turn off at the same time. This undesirable effect cannot occur in the T-type topology. Therefore it is not necessary to implement low-level routines that prevent such transitions, or to provide for transient voltage balancing across series-connected IGBTs.

An additional benefit of using single 1,200 V devices to block the full dc link voltage is reduced conduction losses. Whenever the output is connected to positive or negative, the circuit is exposed to the forward voltage drop of only one device; in the NPC topology, two devices are always connected in series. This considerably reduces conduction losses, making the T-type topology valuable in applications that switch at a low frequency.

Overall, conduction losses are significantly lower than those of the NPC topology, but switching losses are high because of the devices that block the full dc link voltage. So the T-type rectifier is best suited for applications switching at up to 50 kHz, while the NPC topology performs better at frequencies higher than 50 kHz.

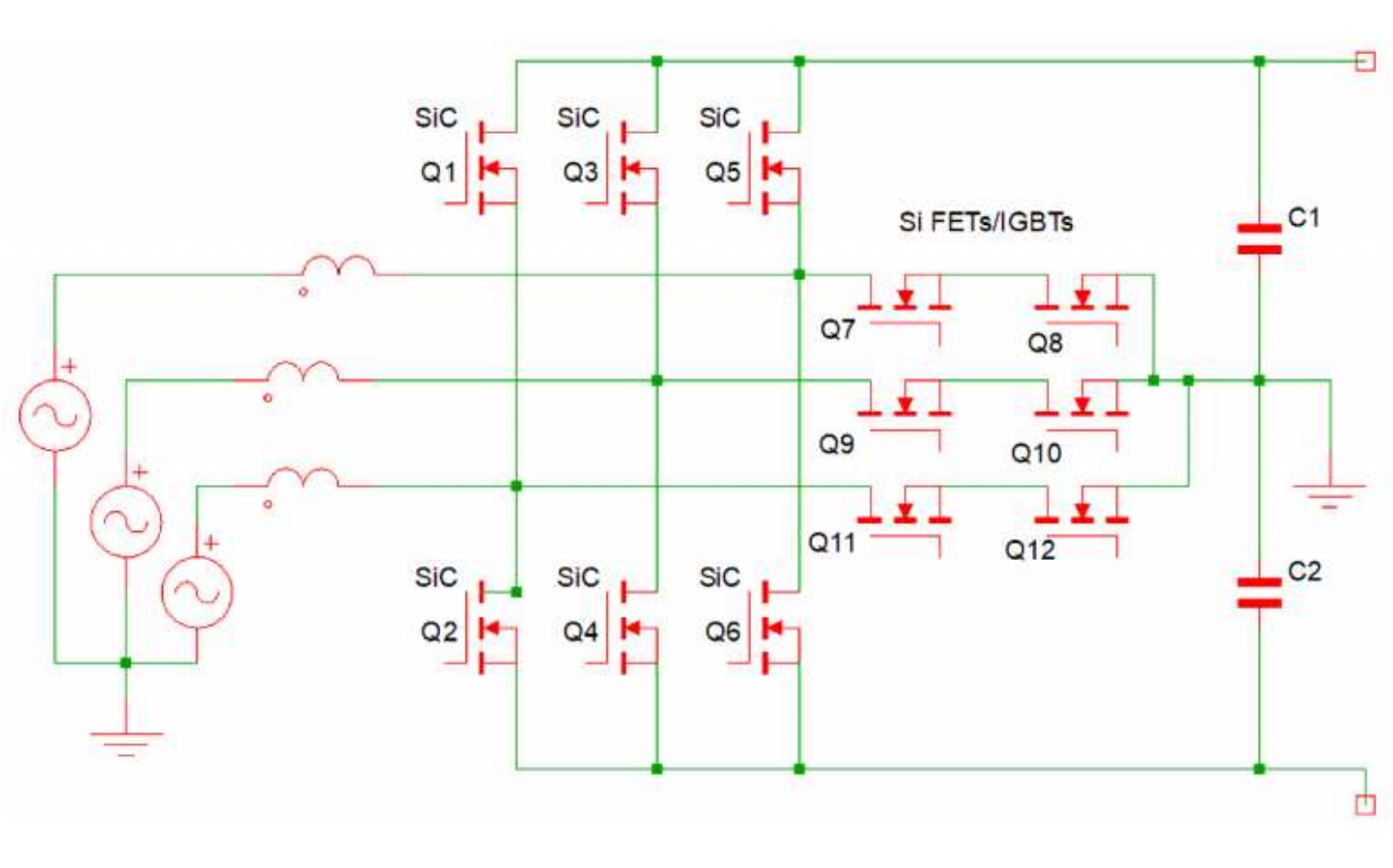

Fig. 5: Three-level T-type NPC PFC topology

Table 1 shows a high-level comparison of the advantages and drawbacks of the three PFC stage topologies described above.

	Two-level PFC	Three-Level NPC	Three-level ANPC	Three-level T-type NPC
Power Density	Low	Higher	Higher	Highest
Efficiency	Low	Very high at high frequencies	Highest	High
Conduction Loss	Low	High	High	Mid
Switching Loss	High	Low	Low	Mid
Peak Voltage Stress	High	Low	Lowest	Low/(high blocking voltage)
Cost	Low	High	Highest	Mid
Control	Easy	Mid	Mid	Mid
Input Inductor	Large	Small	Small	Small
Number of Active Switches	6	12	18	12
Number of SiC Diodes	0	6	0	0

Table 1: Summary of features of PFC topologies

Dc-dc converter stage of a dc charger module

The dc-dc stage is the galvanic isolated converter which converts the incoming dc link voltage of 800 V to a regulated dc output voltage for charging the EV's battery, bypassing the vehicle's on-board charger, which is used only when connecting to an ac charger.

The topology for the bidirectional dc-dc stage can be implemented in one of two ways:

- Dual active bridge
- Dual active bridge in CLLC mode

The dual active bridge topology

The dual active bridge (DAB) converter consists of a full bridge with active switches on both the primary and secondary sides, connected via a high-frequency transformer, shown in Figure 6. Because of the inherently lagging current in one of the bridges, the current discharges the output capacitance of the switches of one bridge at a time. While the secondary side switches are discharged, some switches on the primary side enable zero-voltage switching turn-on. Loss-less capacitive snubbers can also be used across the switches to reduce turn-off losses.

The main advantages of this converter topology are:

- Bidirectional capability, which is achieved by controlling the phase angle between the two bridges
- Modularity, which allows for it to be scaled to higher power levels

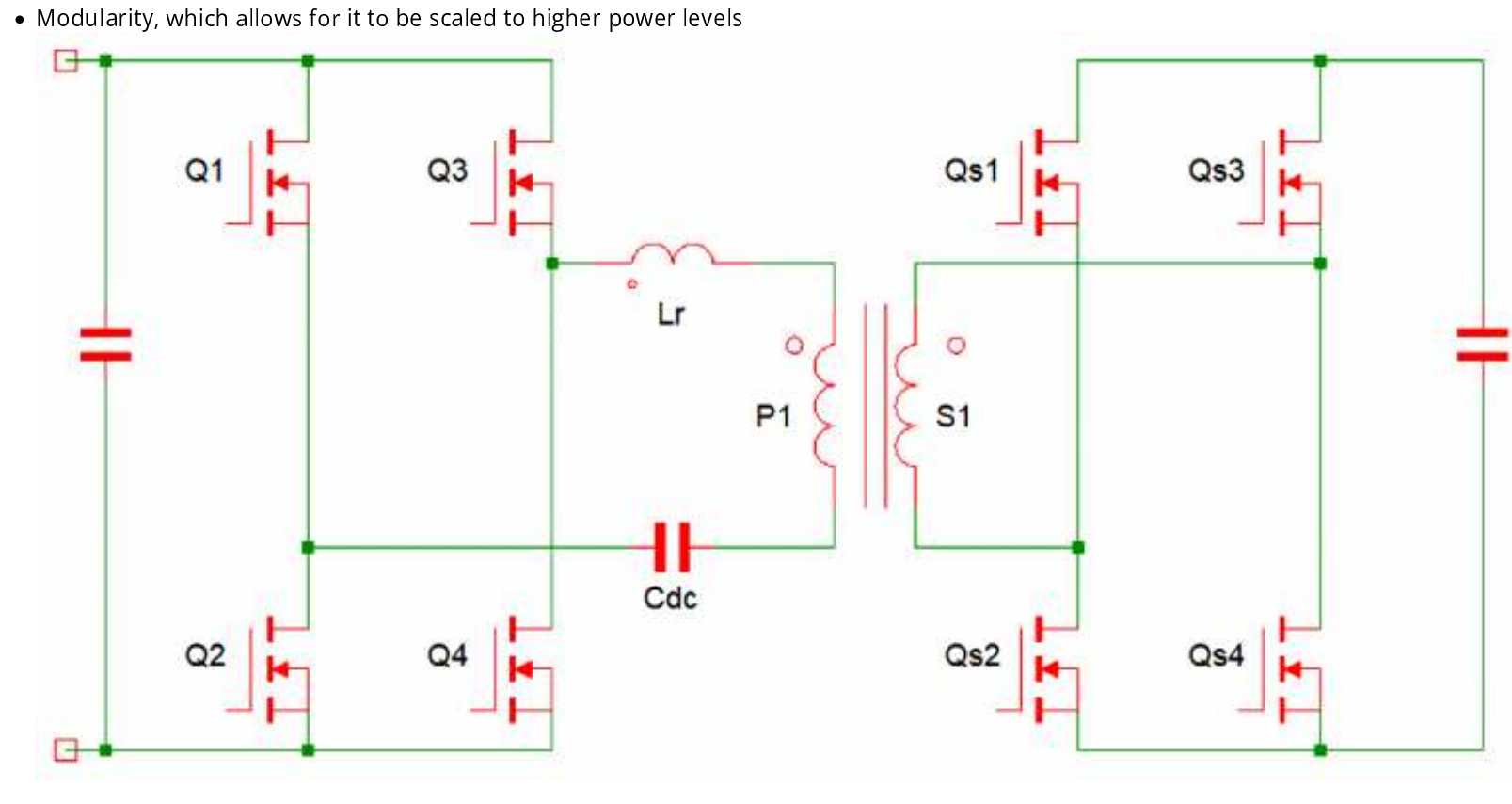

Fig. 6: Dual active bridge dc-dc converter topology

In single-phase shift modulation, the DAB topology is simple to control. For extended, dual- or triple-phase shift modulation, however, the control scheme becomes complex. This topology may be used to cover a wide range of battery voltages with single-phase shift modulation, but circulating currents in the transformer rise to elevated levels, which greatly reduces efficiency.

With advanced modulation schemes such as triple-phase shift modulation, however, the converter can theoretically perform zero-voltage switching over the entire operating range. The ratio of output power to the transformer's KVA rating is high in this topology. The output capacitance required to handle ripple currents is also low.

Overall, this converter is ideal for applications in which power density, cost, weight, isolation and reliability are critical factors, because of its range of attractive features:

- Relatively low component count
- Soft-switching commutation
- Low cost
- High efficiency

It is worth noting, however, that the DAB converter often requires an additional shim inductor to support zero-voltage switching: this increases the size of the circuit and reduces power density.

DAB topology in CLLC mode

The CLLC circuit configuration performs all the functions of the classic LLC, but has the added advantage that the use of active switches across the secondary side enables bidirectional power transfer, which is shown in Figure 7.

This converter operates in zero-voltage/zero-current switching mode, resulting in high efficiency. When there is room to vary the bus voltage by a margin of 10%, this converter can cater for a widely varying battery voltage while maintaining good efficiency. With a fixed bus voltage, however, this topology has a very limited range of operation.

The presence of capacitors on both the primary and secondary sides eliminates the risk of saturation of the transformer's core.

The DAB converter in CLLC mode is actually best suited to ac-dc onboard chargers. It can though be used at power levels higher than onboard chargers handle, up to 15 kW. But scaling to higher power levels and paralleling can be difficult, as it requires a highly symmetrical tank structure and synchronization of multiple modules, which is a difficult task.

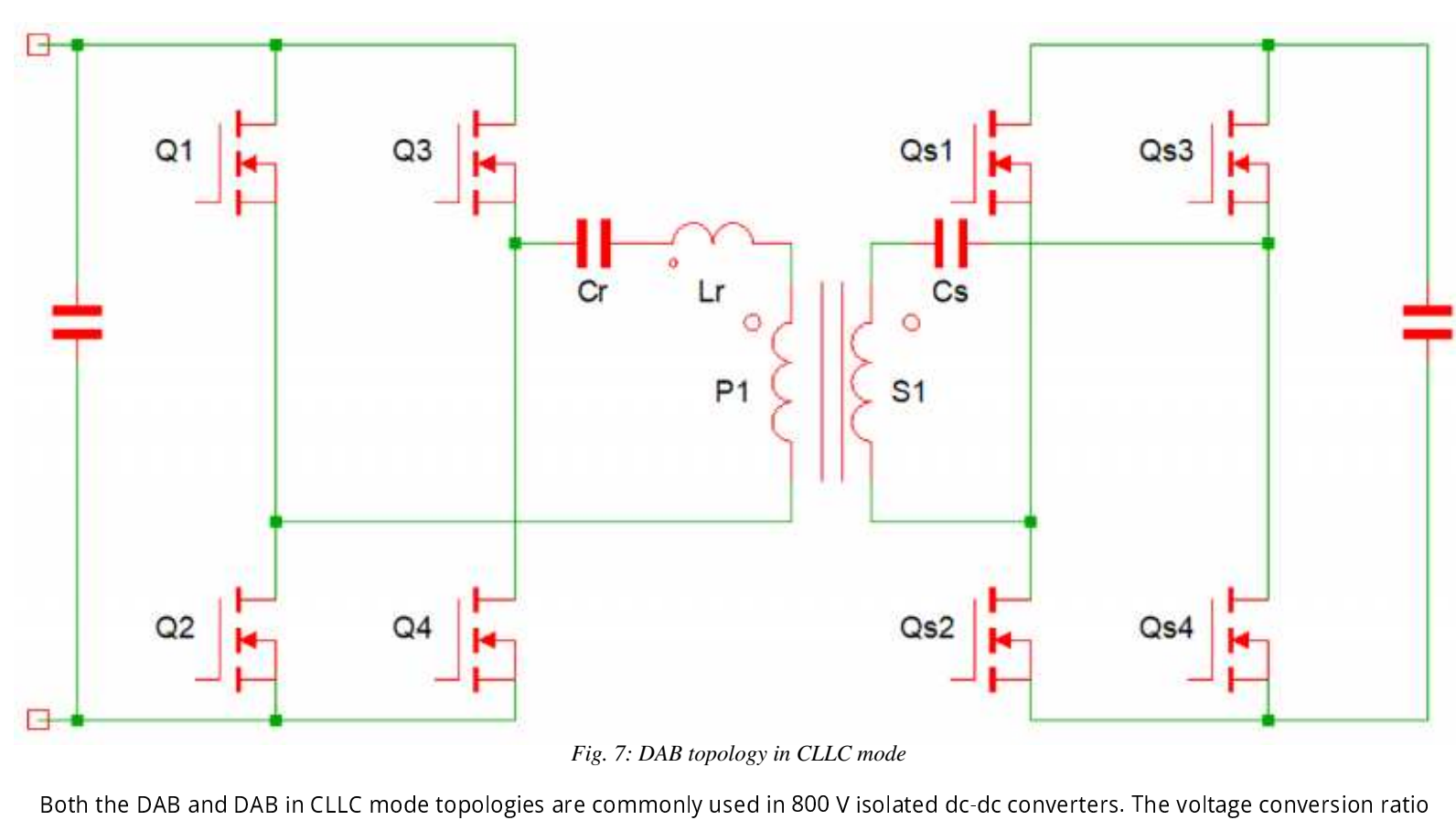

Fig. 7: DAB topology in CLLC mode

Both the DAB and DAB in CLLC mode topologies are commonly used in 800 V isolated dc-dc converters. The voltage conversion ratio controls the connection for the converter terminals, which affects the breakdown-voltage rating required for the switches: a high-voltage converter could be connected in series or in parallel in one terminal, while another remains connected in parallel. This means that there are four possible configurations for the topology's connections.

Two examples of the DAB topology in CLLC mode are shown: Figure 8 shows a series input configuration, and Figure 9 a parallel input configuration for an 800 V bus voltage with a wide output-voltage range of 200 V to 1 kV.

The advantage of the series-input full-bridge CLLC is its narrow resonant-frequency range over a wide output-voltage range, resulting in lower switching losses; here, a 650 V device could be used. But this calls for more complex control of the dc bus capacitor voltage in series on the dc bus side. In addition, to achieve a given efficiency, a device with lower on-resistance is required than in a single full bridge using 1,200 V devices.

The advantage of the parallel-input full-bridge DAB converter in CLLC mode is that, for a given efficiency, the circuit can use devices with a higher on-resistance, while the control scheme is easier. A wide resonant-frequency range is required to support a wide output-voltage range.

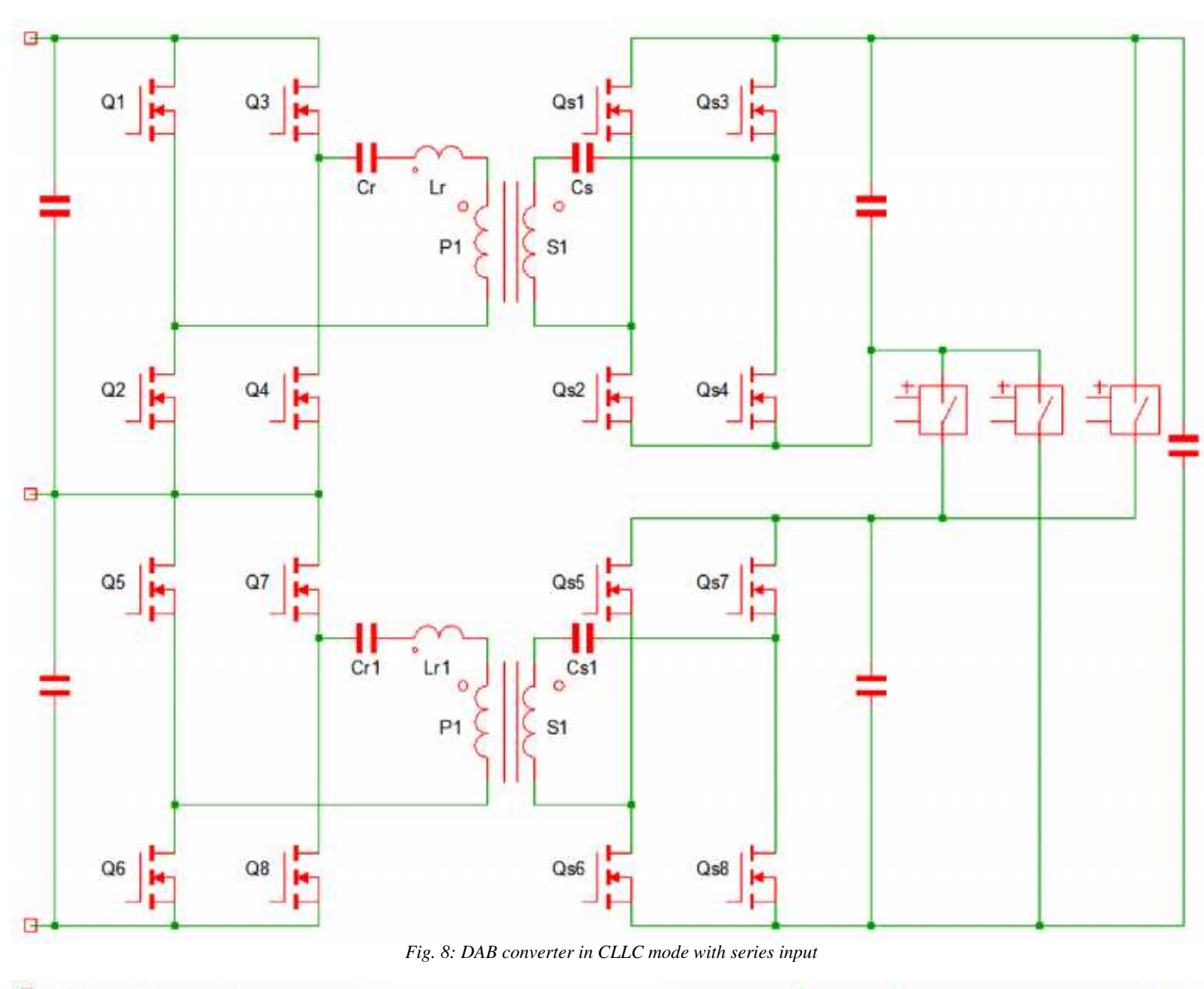

Fig. 8: DAB converter in CLLC mode with series input

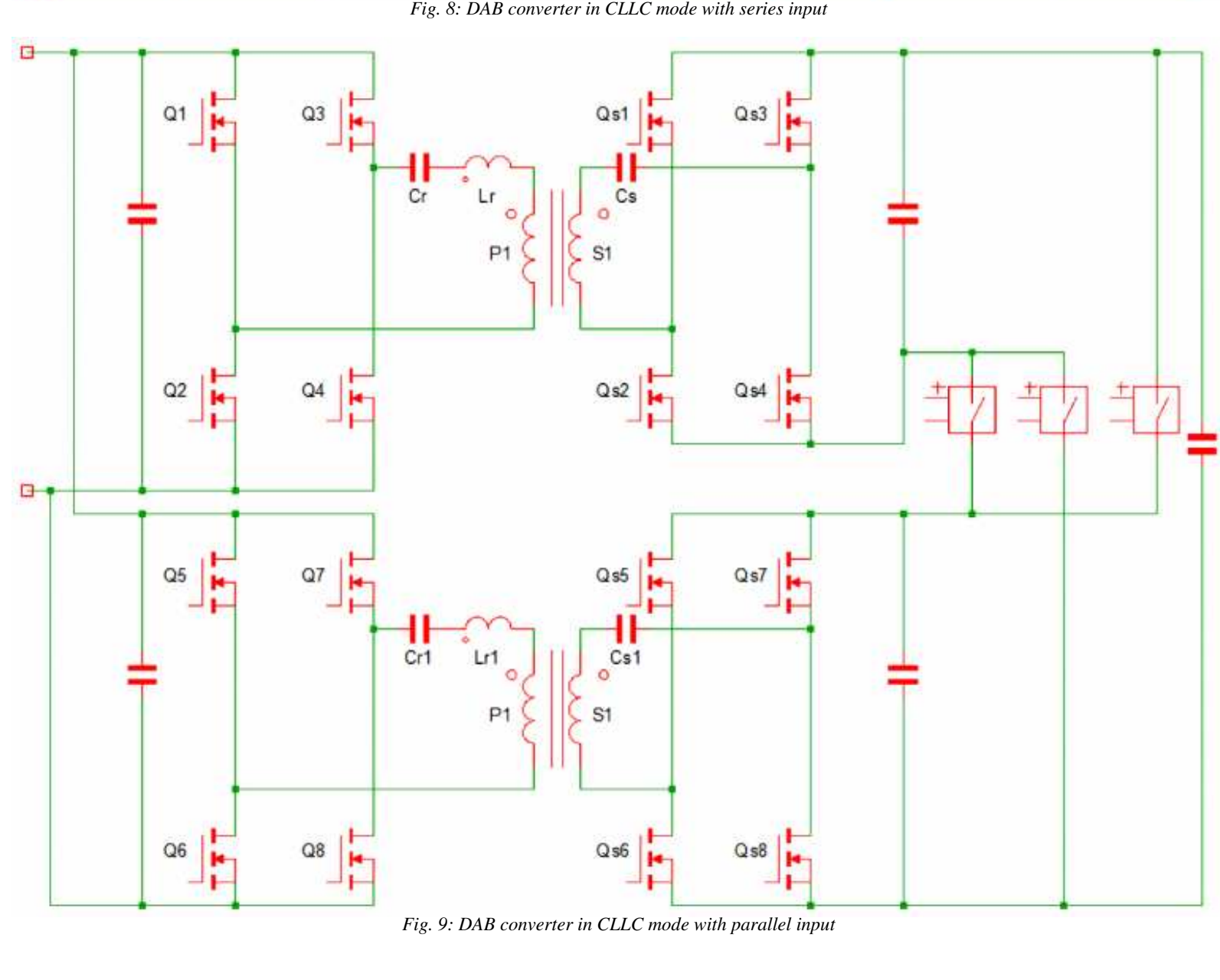

Fig. 9: DAB converter in CLLC mode with parallel input

The advantages and drawbacks of the two dc-dc stage topologies are shown in Table 2.

	DAB	DAB in CLLC mode
Peak Device Stress	Low	High
Switching Frequency	High	Very High
Control	PWM (simple)	Frequency (moderate)
Wide Battery Voltage Range, Fixed Bus Voltage	Yes (with reduced efficiency)	Limited range
Input RMS Currents	Low	High
Conduction Losses	Low	Medium
Turn-on Switching Loss	ZVS	ZVS
Turn-off Switching Loss	High (device turn-off at peak leakage inductor current value)	Low (primary-side turn-off decided by magnetizing inductor current, secondary-side turn-off is zero to ZCS)
Total Losses	Medium	Low
Efficiency	High	Very High
Paralleling Modules	Easy	Difficult
Number of Active Switches	8	8

Table 2: Summary of the features of two dc-dc stage topologies

Reference designs accelerate implementation of new dc charger circuits

The leading SiC MOSFET manufacturers supply reference designs that provide a blueprint for new high-power dc charger designs, either in part or in whole.

The **STMicroelectronics STDES-PFCBIDIR** 15 kW bidirectional PFC stage converter implements the T-type NPC topology, shown in Figure 10. Digitally controlled, it converts between 400 V ac and 800 V dc. Efficiency is almost 99%. ST has optimized the passive components for both size and cost, and the converter offers high power density.

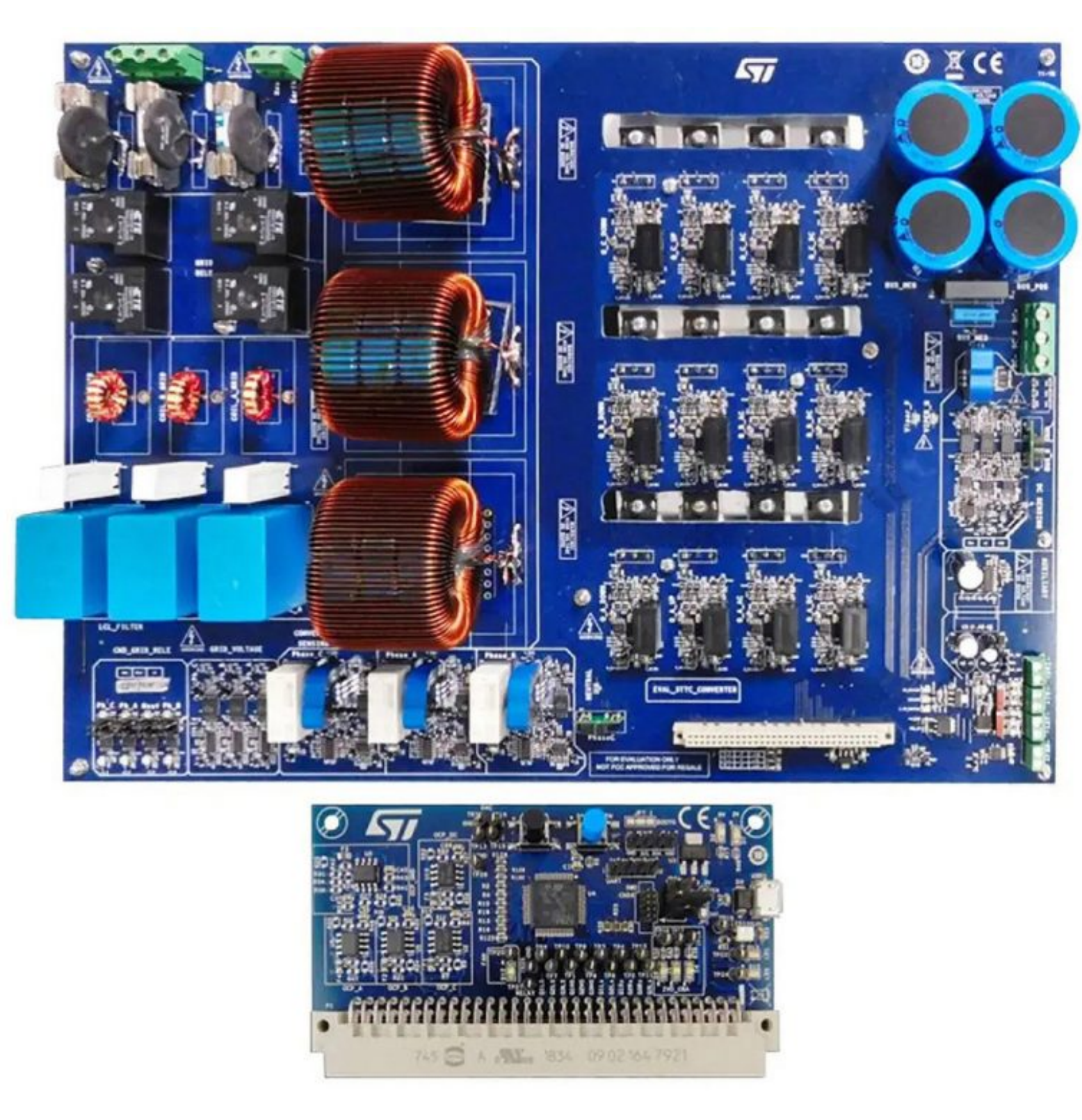

Fig. 10: The STDES-PFCBIDIR PFC reference design from STMicroelectronics is notable for its high efficiency and power density

A pairing of the STDES-PFCBIDIR with ST's 25 kW **STDES-DABBIDIR** provides a complete solution for a bidirectional EV charger. The STDES-DABBIDIR implements the DAB topology switching at 100 kHz with a SiC MOSFET power module in an ACEPACK 2 package, shown in Figure 11. Digital control is performed by an STM32G474RE MCU. Soft-switching operation is managed by adaptive modulation techniques, which respond to variations in the load and voltage.

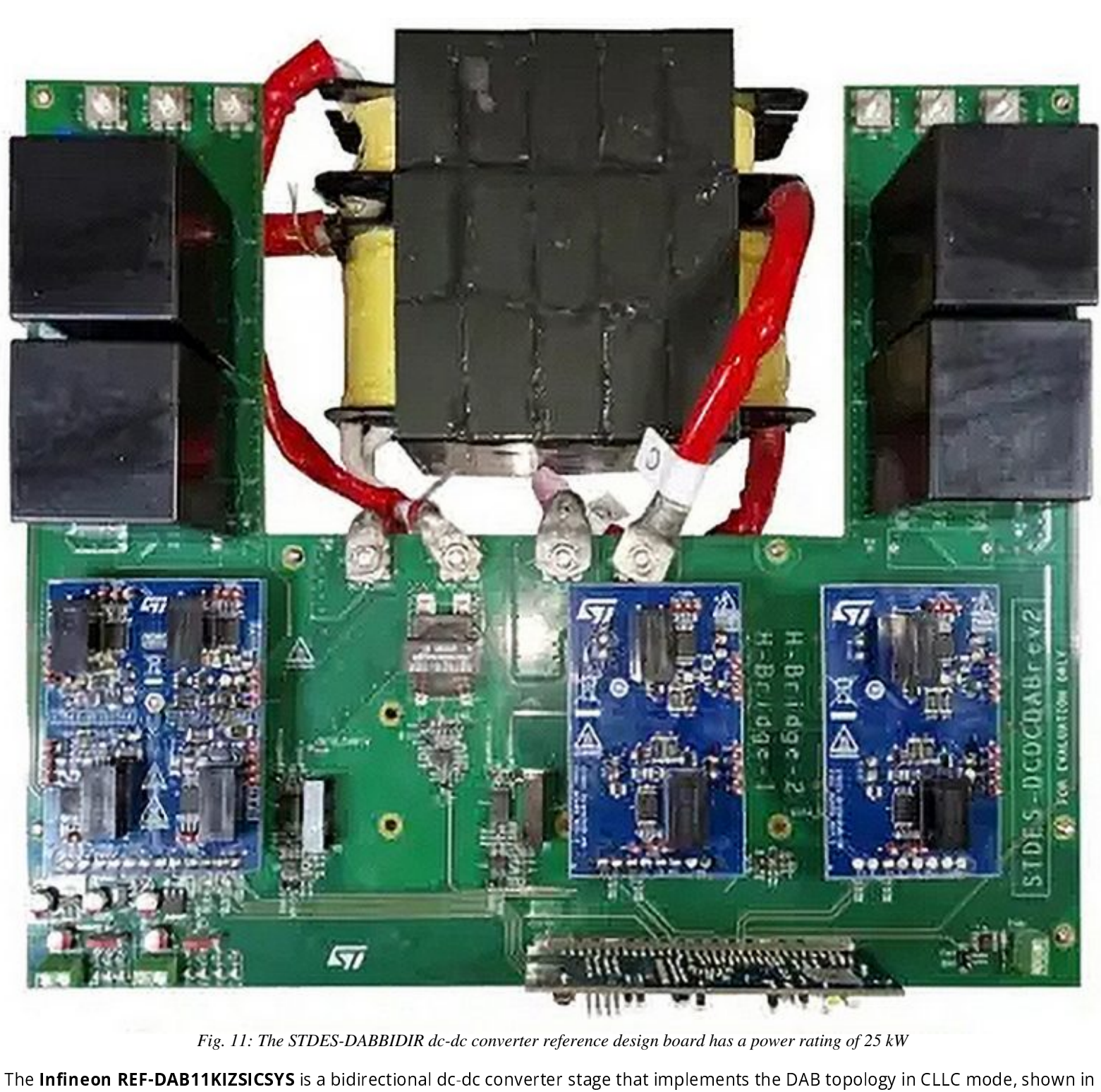

Fig. 11: The STDES-DABBIDIR dc-dc converter reference design board has a power rating of 25 kW

The **Infineon REF-DAB11KIZSICSYS** is a bidirectional dc-dc converter stage that implements the DAB topology in CLLC mode, shown in Figure 12. It provides an output of up to 11 kW at 800 V, at higher than 97% efficiency.

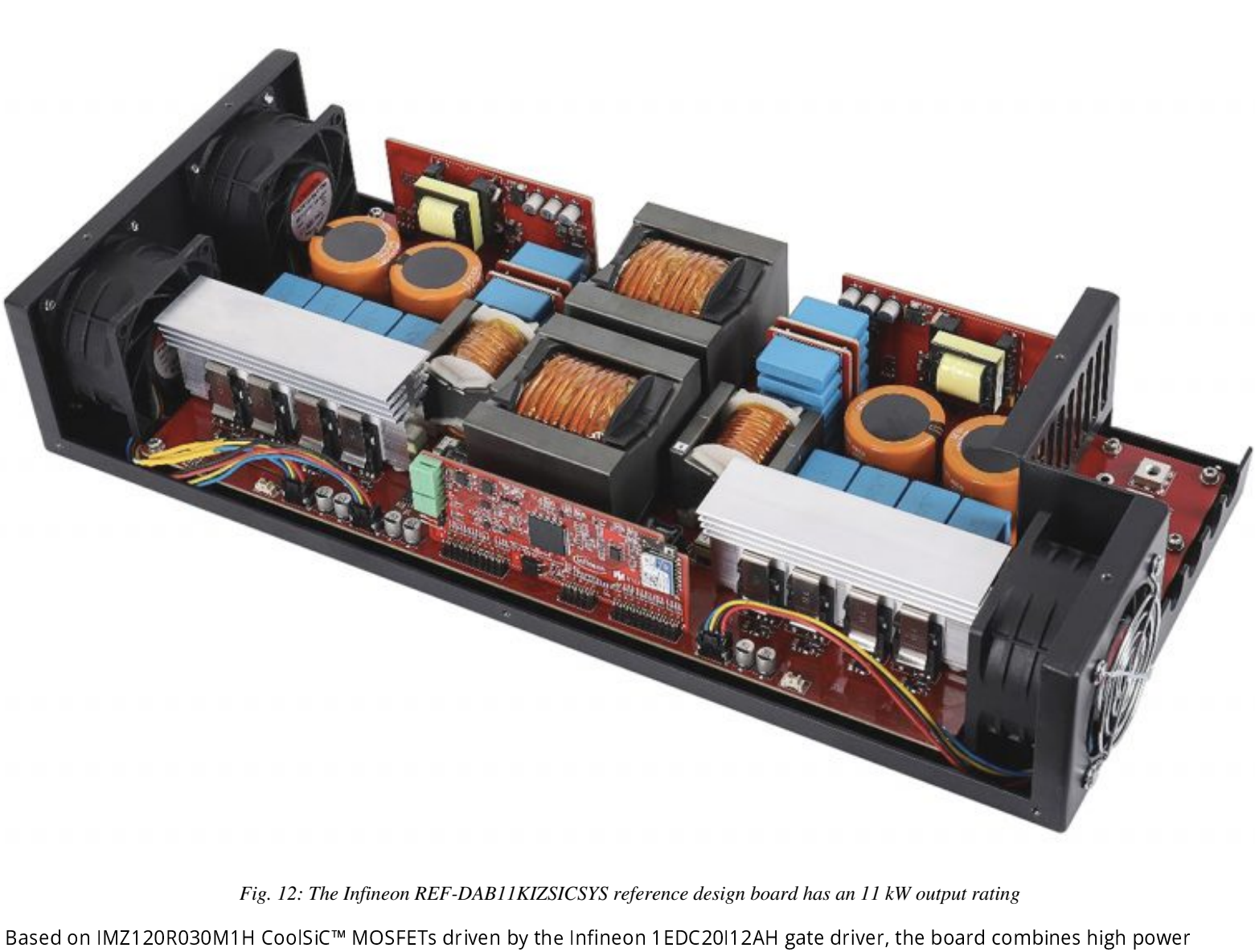

Fig. 12: The Infineon REF-DAB11KIZSICSYS reference design board has an 11 kW output rating

Based on IMZ120R030M1H CoolSiC™ MOSFETs driven by the Infineon 1EDC20I12AH gate driver, the board combines high power density and reliability at low cost.

Infineon has also developed a complete dc-dc charger reference design, the **REF-EV50KW2SICKIT**, due for release in 2023. This 50 kW dc charger sub-unit is intended for use as a module in stacked high-power charging systems, and shown in Figure 13.

The design achieves a power factor of higher than 0.95, and maximum efficiency of 96%.

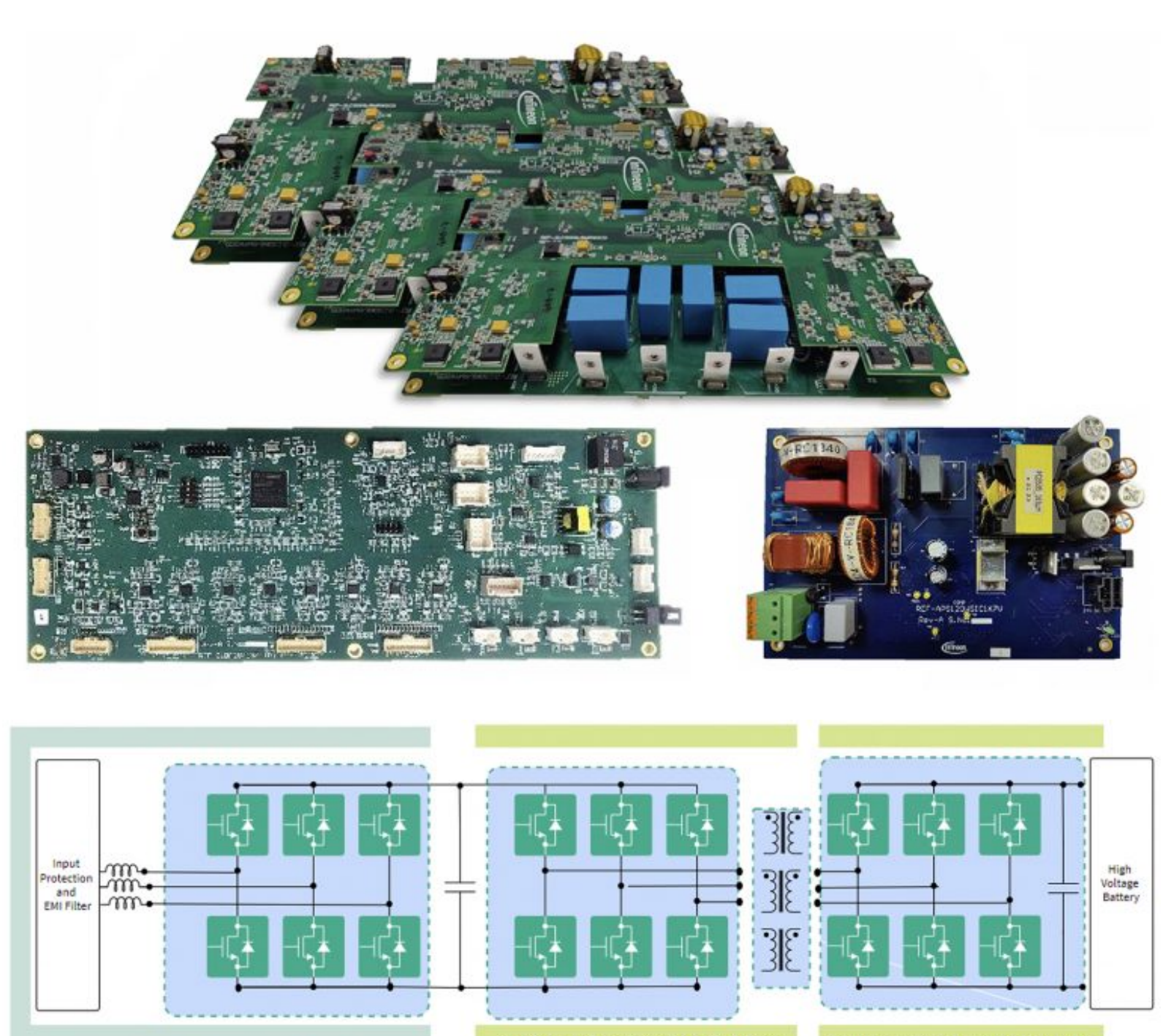

Fig. 13a, 13b: The REF-EV50KW2SICKIT from Infineon implements a complete dc-dc fast charger

On release, Infineon will offer fully assembled boards that fit into a 19″ 4U rack. A power control card plus software with GUI will also be available.

Another complete dc-dc charger design is supplied by onsemi. The **SEC-25KW-SIC-PIM-GEVK** is a 25 kW charger which implements the two-level PFC and DAB topologies, shown in Figure 14.

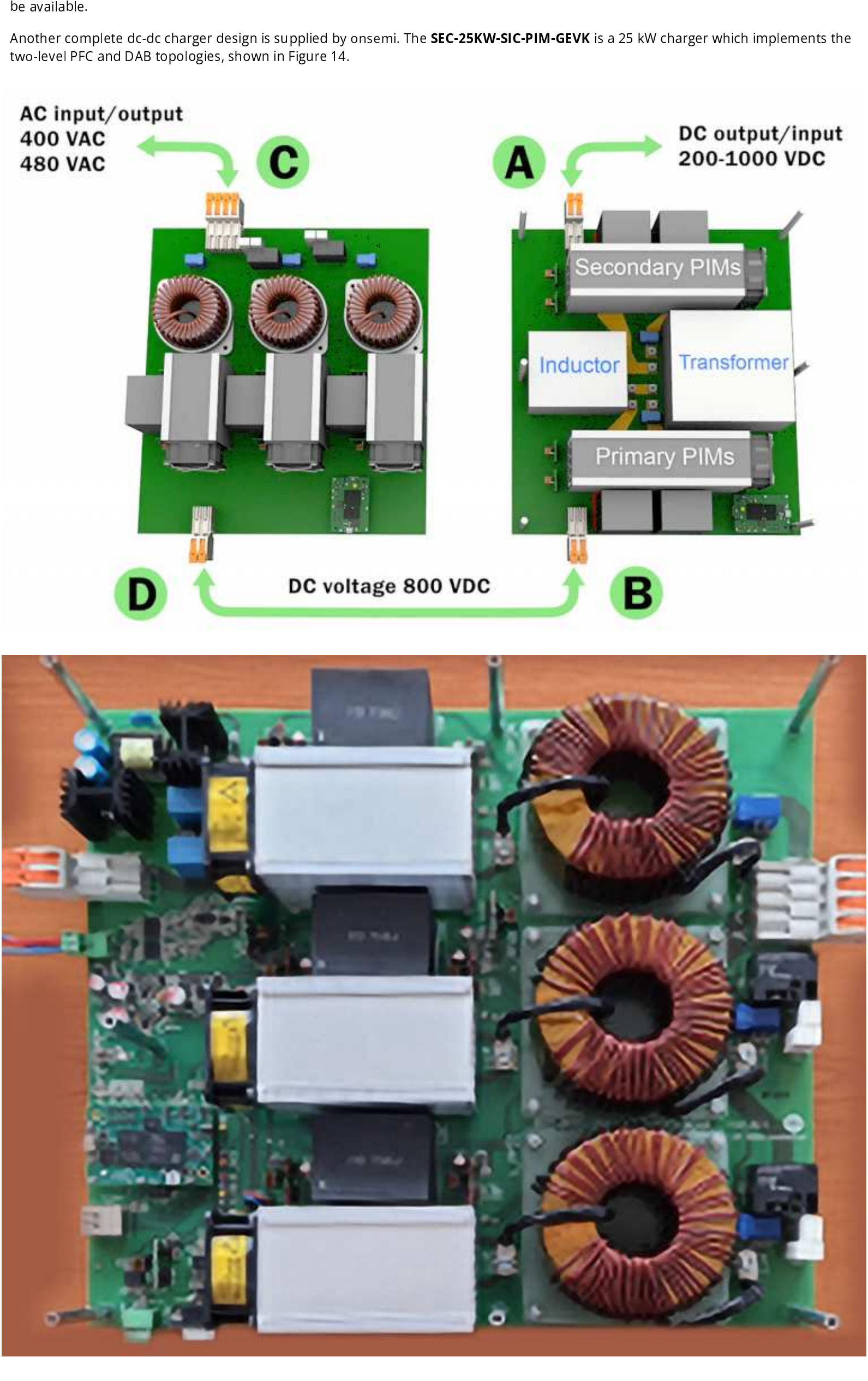

Fig. 14: SEC-25KW-SIC-PIM-GEVK reference design from onsemi is a 25 kW dc-dc charger

The SEC-25KW-SIC-PIM-GEVK features multiple NXH010P120MNF1 half-bridge SiC modules which have a breakdown-voltage rating of 1,200 V. Notable for their very low on-resistance of 10 mΩ and low parasitic inductance, these SiC modules substantially reduce conduction and switching loss. Conversion operations are controlled by a powerful universal controller board based on a Zynq -7000 SoC FPGA. The output-voltage range is 200 V to 1,000 V, and efficiency is up to 96%.

Multiple SEC-25KW-SIC-PIM-GEVK boards can be stacked together in a single cabinet to supply the output power required by the application.

Conclusion

The choice of topologies in the PFC and dc-dc converter stages of bidirectional EV fast chargers gives the designer the choice of optimizing for size, cost, efficiency, output power, component count, and ease of control.

The availability of high-performance reference designs from the leading SiC device manufacturers gives designers a head start in implementing some of these topologies.

MCU features crypto accelerator and on-board keys to enhance security of connected devices

Dual-core STM32H757 MCU from STMicroelectronics sets new benchmarks for performance from embedded Flash memory. A graphics accelerator is a powerful feature in sophisticated human-machine interfaces.

The STMicroelectronics STM32H757 is a high-performance dual-core microcontroller which offers valuable power-saving features and enhanced cyber protection.

The STM32H757 MCU includes dual Arm® Cortex®-M7 and Cortex-M4 cores which run at up to 480 MHz and 240 MHz respectively. To maximize energy efficiency, each core operates in its own power domain and can be turned off individually when not needed.

For applications that call for enhanced security, the STM32H757 includes a cryptography/hash accelerator. It comes with pre-installed keys and native secure services including Secure Firmware Install (SFI). SFI allows standard products to be ordered anywhere in the world and have the encrypted firmware delivered to an external programming company without exposing unencrypted code. In addition, built-in support for secure boot and secure firmware update protects over-the-air feature upgrades and patches.

Performance is another strong suit of the STM32H757. Benefiting from ST's smart architecture, efficient L1 cache, and adaptive real-time ART Accelerator™ engine, the MCU sets a new speed record of up to 1,327 DMIPS, and a 3,224 CoreMark™ score for some parts when executing from embedded Flash. ST's Chrom-ART Accelerator™ block provides an extra speed boost in graphics applications.

Developers can easily upgrade existing applications through flexible use of the two cores. A sophisticated user interface can be added to an application such as a motor drive formerly hosted on a single-core Cortex-M4 MCU by migrating legacy code to the STM32H757 Cortex-M4 core, with the new GUI running on the Cortex-M7 core. Another example is to boost application performance by offloading intensive workloads such as neural networks, checksums, DSP filtering, or audio codecs.

The dual-core architecture also helps to simplify code development and accelerate time to market in projects in which user-interface code may be developed separately from real-time control or communications features.

life.augmented

FEATURES

- Up to 2 Mbytes of dual-bank Flash
- Up to 1 Mbyte of RAM
- Error correction code for all Flash and RAM memory
- Three 16-bit ADCs
- Two 12-bit DACs
- Ethernet controller
- Two FD CAN controllers
- Two USB 2.0 controllers
- Camera interface

APPLICATIONS

- Industrial equipment
- Consumer devices
- Medical equipment
- Artificial Intelligence (AI) systems

FREE DEV BOARD

Evaluation platform for dual-core microcontroller.

Orderable Part Number
STM32H757I-EVAL

APPLY HERE NOW

BUY NOW | DATASHEET | SAMPLES

ENERGY | INDUSTRIAL | LIGHTING | MEDICAL | TRANSPORT | SECURITY | CONSUMER | TELECOMS

MCUs based on Arm Cortex-M33 core offer advanced security features for industrial and IoT applications

RA4M2 Group microcontrollers from Renesas extend the security features of the Arm Cortex -M33 core, including TrustZone secure partitioning, adding a cryptography engine, key management, tamper detection and more.

Renesas has introduced 12 new products in the Renesas RA Family of microcontrollers, offering a combination of very low power consumption, high performance, and enhanced security capabilities. The new RA4M2 MCUs' features make them ideal solutions for industrial systems and IoT edge devices.

The highly power-efficient RA4M2 Group MCUs draw an operating current of only 80 µA/MHz in active mode, and a low standby current of 0.7 mA. Low-power operation does not prevent these new devices from providing a fast response: wake-up time from standby is just 30 µs, and maximum operating frequency is 100 MHz.

The RA4M2 MCUs take advantage of the specialized security capabilities of the Arm Cortex-M33 core, including the TrustZone technology for secure partitioning of operations involving trusted hardware peripherals. This technology is augmented in the RA4M2 MCUs by the Renesas Secure Crypto Engine, which incorporates multiple symmetric and asymmetric cryptography accelerators, advanced key management, security lifecycle management, resistance to power analysis, and tamper detection.

This rich suite of advanced security features enables developers to realize the functionality of a secure element, providing an integrated solution for the requirements of IoT edge devices.

The RA4M2 Group is supported by the easy-to-use Flexible Software Package (FSP), which includes a best-in-class driver for hardware abstraction layers. The FSP uses a GUI to simplify and accelerate the development process, while also making it easy for developers to make the transition from an 8- or 16-bit MCU design.

RENESAS

FEATURES

- Scalable package options:
  - LQFP packages, 48 to 100 pins
  - 48-pin QFN
- Up to 512 kbytes of Flash memory
- 128 kbytes of SRAM
- Capacitive touch-sensing unit
- USB 2.0 Full Speed interface
- 12-bit ADC
- Two 12-bit DACs
- Serial communications interface

APPLICATIONS

- IoT edge devices
- Fire detection systems
- Intruder detection systems
- Alarm panel controls
- Metering
- Robotics
- Door openers
- Sewing machines
- Vending machines
- Uninterruptible power supplies
- Heating, air conditioning and boiler controls

FREE DEV BOARD

Evaluation kit for RA4M2 Group microcontrollers.

Orderable Part Number
EK-RA4M2

APPLY HERE NOW

BUY NOW | INFORMATION | DATASHEET | SAMPLES

ENERGY | INDUSTRIAL | LIGHTING | MEDICAL | TRANSPORT | SECURITY | CONSUMER | TELECOMS

6 W isolated dc-dc converters operate reliably in harsh environments

CUI Inc PQDE6W-U power converters, in a rugged U-frame package, support an industrial operating-temperature range, making them ideal for use in harsh environments, and with a wide set of input- and output-voltage options.

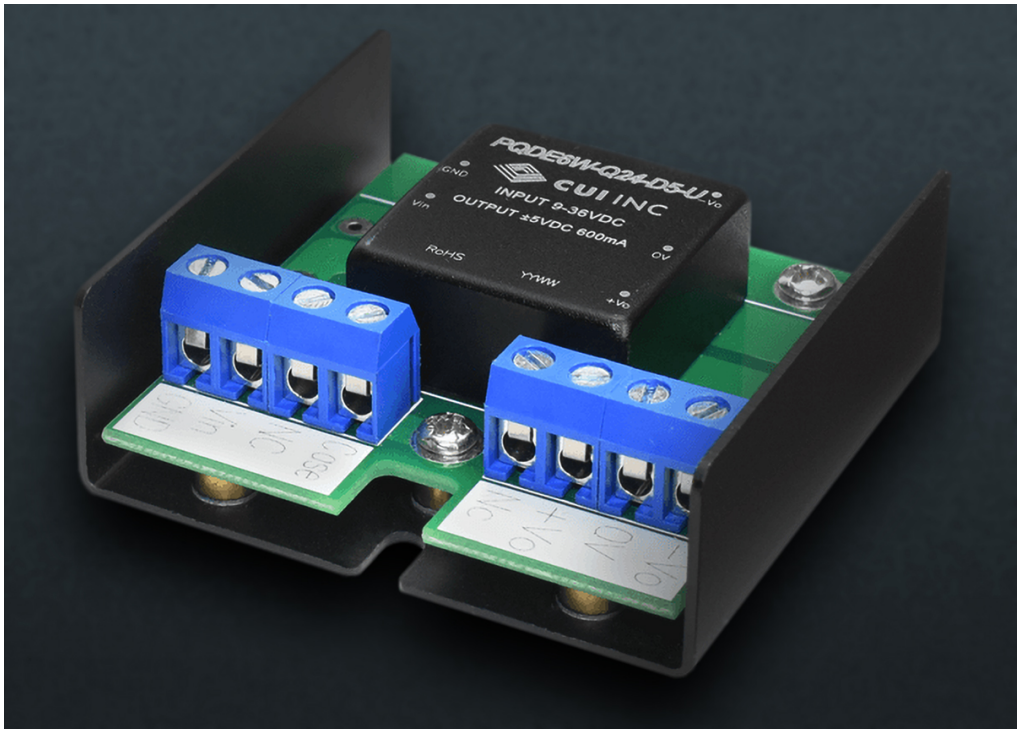

Producing 6 W of continuous power, the PQDE6W-U series isolated dc-dc converters from CUI Inc are housed in a compact chassis-mount U-frame package that provides for easy installation.

These low-profile modules feature a 4:1 input-voltage range, and are available with both single and dual regulated outputs. Input-voltage options are either 9 V to 36 V, or 18 V to 75 V. Single output-voltage options are 3.3 V, 5 V, 9 V, 12 V, 15 V and 24 V, and the dual options are -5/5 V, -12/12 V, -15/15 V and -24/24 V.

The converters' wide operating-temperature range and 1.5 kV of isolation make them suitable for use in the harsh operating conditions of renewable energy, railway, and industrial applications.

CUI INC

FEATURES

- Up to 88% conversion efficiency
- Protection functions:
  - Under-voltage
  - Short-circuit
  - Over-current
  - Over-voltage
- Input and output connections on same side
- Operating-temperature range: -40°C to 85°C
- EN/BS EN 62368-1 certified

APPLICATIONS

- IoT devices
- Consumer devices
- EV charging and e-mobility
- Renewable energy equipment
- Railway equipment
- Industrial equipment

6 A relay with ultra-low profile enables designers to shrink safety modules

The SF-M relay from Panasonic is ideal for safety applications in motor-control systems or extension modules. The relay complies with the specifications of the IEC 61810-3 standard for relays with forcibly guided contacts.

Panasonic INDUSTRY

FEATURES

- 14 mm x 33 mm footprint
- Coil-voltage options:
  - 3 V, 5 V, 12 V, 16 V, 18 V, 21 V, 24 V
- 270 mW operating power
- 100 mΩ maximum contact resistance
- Ambient-temperature range: -40°C to 85°C

APPLICATIONS

- Industrial automation
- Building automation
- Robotics
- Railway signaling
- Access control
- Machine tools

The SF-M safety relay from Panasonic is the industry's first to fit one normally open (1NO) and one normally closed (1NC) power contact in a flat package which is just 7.8 mm high. Designers can use the SF-M relay to miniaturize any kind of safety module, as it can switch high loads on both contacts.

The power contacts can switch 6 A on the NO side and 4 A on the NC side at 250 V ac or 30 V dc. This means that the SF-M can directly handle loads such as motors or valves without any additional relay between it and the load.

The SF-M relay also handles low-voltage signals effectively: the silver alloy contacts can handle signals as small as 10 V/1 mA. This capability is useful in many applications, particularly track-side railway signaling equipment and industrial systems.

In line with the specifications of the IEC 61810-3 standard, the forcibly guided contacts monitor each other to enable the implementation of any kind of safety control application. The SF-M relay supports systems for the safe operation of machinery, automation or building equipment.

On the NO side, reinforced insulation of at least 5.5 mm meets the IEC category III specification, and can withstand surges of up to 6 kV. The SF-M relays offer high shock and vibration resistance of at least 20 g. Low coil holding power consumption of 100 mW helps to improve system efficiency.

The SF-M series relays are available in reflow-mountable and through-hole configurations.

How the latest generation of 1,200 V IGBTs raises energy efficiency to a new level

By Hunter Freberg
Technical Marketing Engineer, onsemi

The worldwide drive to achieve net zero in carbon emissions has prompted an astonishing build-out of energy infrastructure, such as wind farms, solar farms, and battery-based energy storage systems (ESS). The more efficiently this infrastructure operates, the more zero-carbon power it can supply to energy consumers.

This is intensifying the competition among semiconductor vendors to reach new efficiency benchmarks for the crucial power components that determine how efficiently systems such as power inverters, converters and motors run. The latest such benchmark has been set by onsemi with the introduction of its new FS7 family of 1,200 V trench field stop IGBTs.

Interestingly, the FS7 family consists of two product series, which meet the demands of different types of applications for the latest high-efficiency IGBTs:

- High-frequency, high-power switching converters and inverters, in products such as solar power generators, ESS, welding equipment, and induction cookers
- High-power three-phase motors. This includes brushless dc motors, and both synchronous and asynchronous ac motors.

In the first set of applications, a substantial contribution to power losses comes from switching; in the second set of applications, conduction losses have a larger impact. So onsemi has tuned the inherent IGBT trade-off between collector-emitter saturation voltage and turn-off energy differently in the two series of FS7 IGBTs:

- The S series is optimized for low turn-off energy, to minimize switching losses in high-frequency converters and inverters
- The R series is optimized for low saturation voltage, to minimize conduction losses in motors, and in solid-state relays (SSRs)

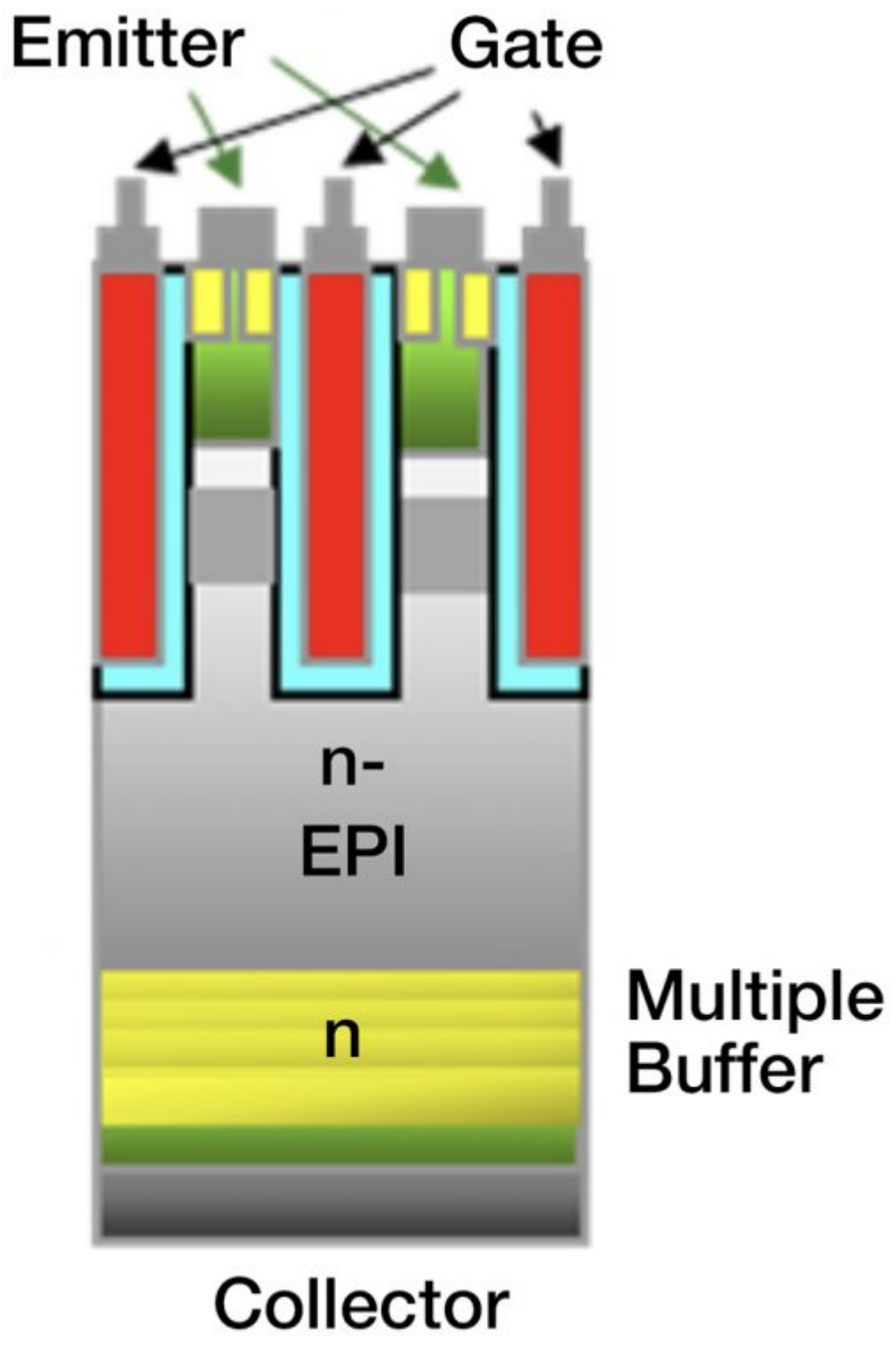

Fig. 1: The new FS7 field stop IGBTs from onsemi feature process enhancements including a trench narrow mesa and a proton implant multiple buffer.

These new FS7 IGBTs benefit from a host of process and design enhancements which not only increase performance compared to earlier generations of 1,200V IGBTs, but also make the devices easier to control and more robust as shown in Figure 1. The new IGBTs include a co-packaged, optimized Gen 7 diode which produces a low forward voltage and optimizes switching softness. Their clean switching waveforms are shown in Figure 2.

Ruggedness is demonstrated by the S series' ability to avoid latch-up at up to seven times the device's rated current, giving power-system designers very high confidence that it will continue to operate safely even under severe fault conditions.

In addition, the R series IGBTs are rated for short-circuit, eliminating any concerns about the power switch's operation in the event that a motor generates an extreme current spike.

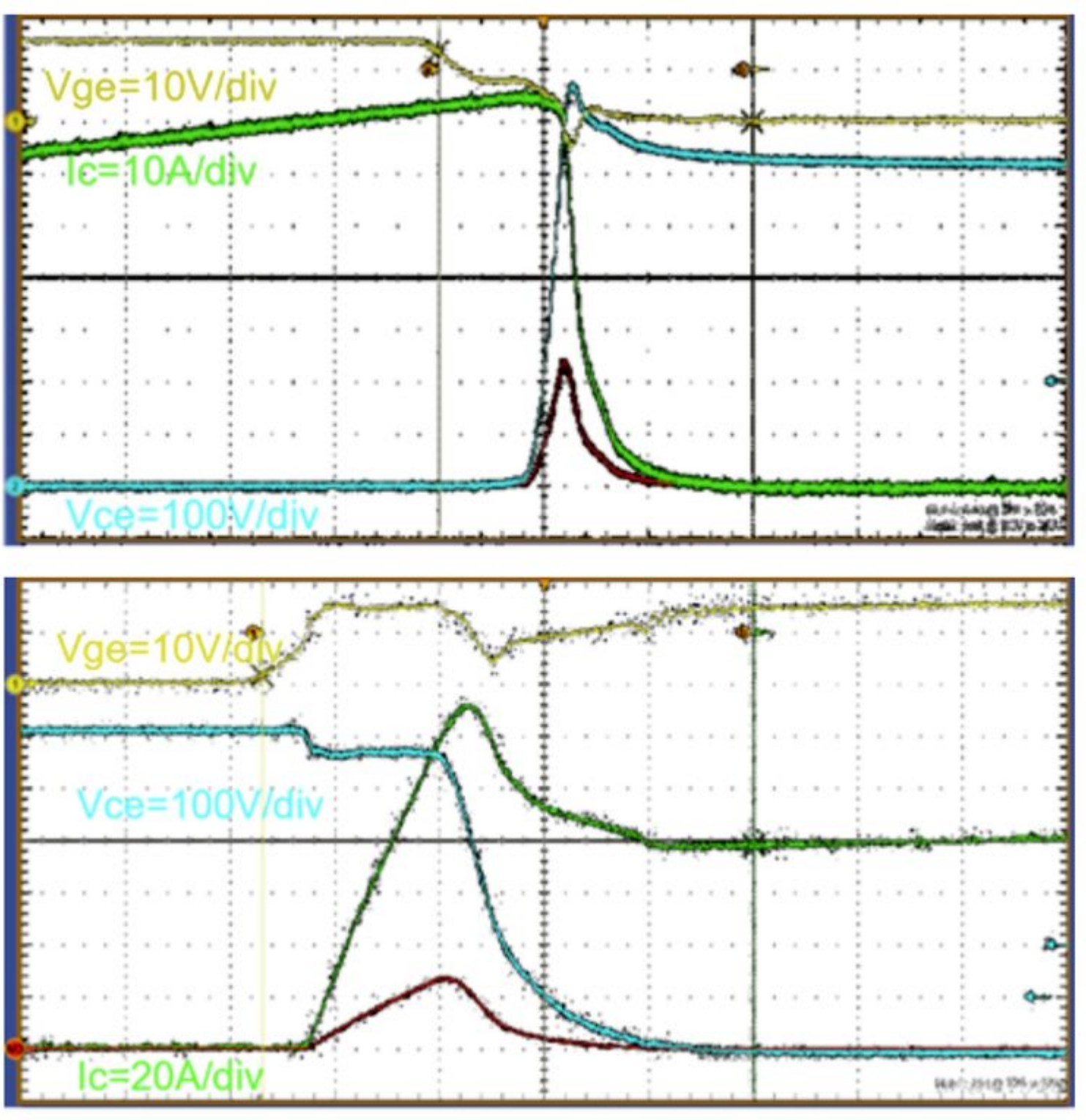

Fig. 2: Switching waveforms for the FS7 IGBT when turning on (top) and off (bottom).

Efficiency performance steps up

Power-system designers commonly evaluate a new line of IGBTs for their impact on system efficiency. So how substantial an improvement does the FS7 family provide?

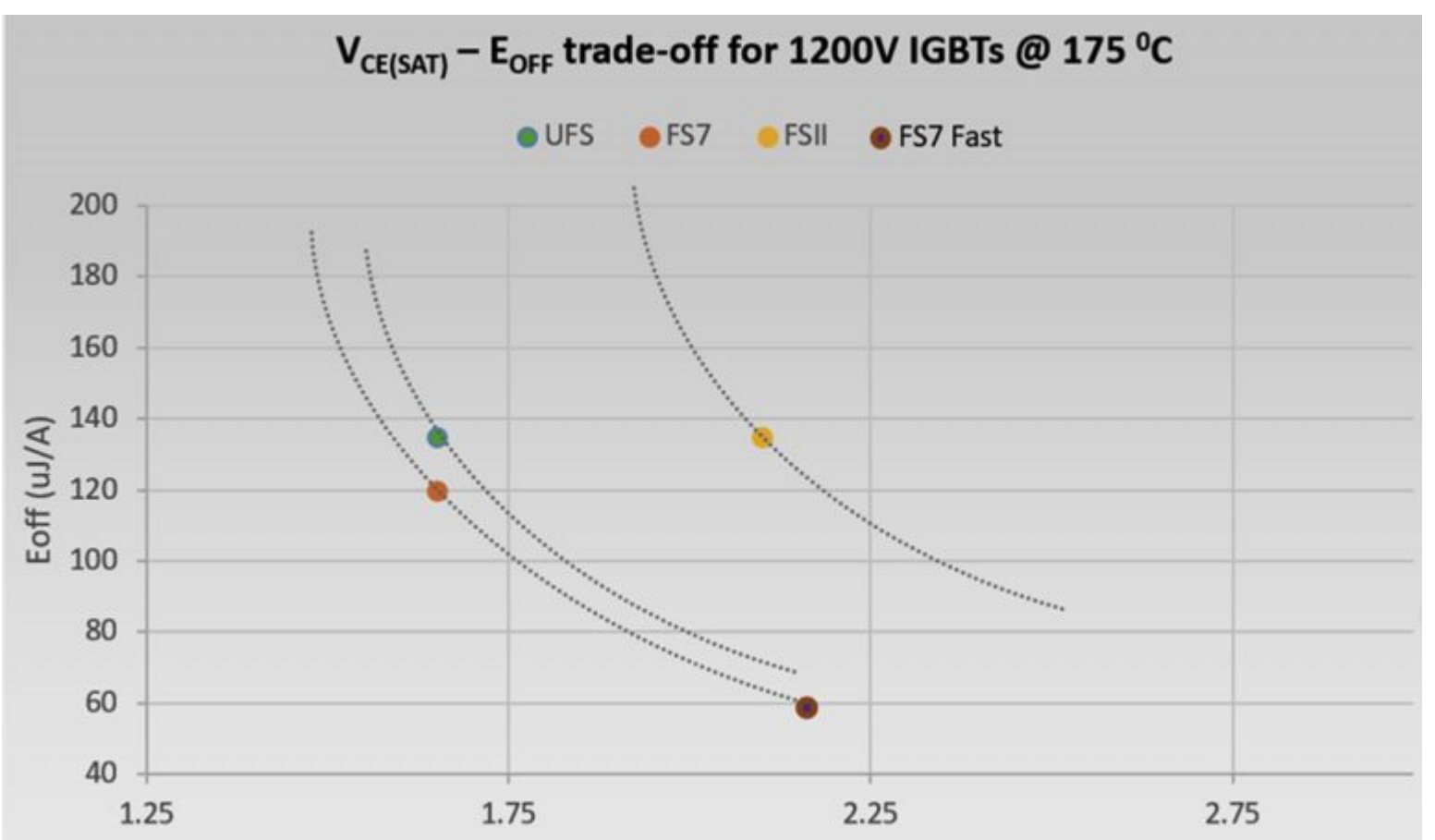

Fig. 3: Plot of the trade-off of saturation voltage against turn-off energy at 175°C for the FS7 family, the UFS (FS3) and FS2 families from onsemi.

For three-phase motor applications and SSRs, in which conduction losses must be minimized, the FS7 R series features a low saturation voltage of 1.65 V at 175°C, while its turn-off energy at this saturation voltage and temperature is 120 µJ/A.

For power conversion and inversion applications, which call for low switching losses, the FS7 'Fast' S series offers very low turn-off energy of just 57 µJ/A.

As shown in Figure 3, there is a marked reduction in turn-off energy for the same saturation voltage between the earlier onsemi FS2 family and the new FS7 S series.

Broad portfolio of efficient IGBTs for multiple application requirements

The FS7 family of 1,200V IGBTs is available in four versions:

- The S series
  - **FGY75T120SWD** 75 A current rating, housed in a power TO-247 three-lead package
  - **FGY60T120SWD** 60 A current rating, housed in a power TO-247 three-lead package
  - **FGHL40T120SWD** 40 A current rating, housed in a standard TO-247 three-lead package
- The R series
  - **FGY100T120RWD** 100 A current rating, housed in a power TO-247 three-lead package

onsemi has more FS7 devices under development with current ratings ranging from 40 A to 160 A:

- In a standard TO-247 three-lead package
  - R series: 40 A and 60 A current ratings
- In a power TO-247 three-lead package
  - S series: 100 A current rating
- In a power TO-247 four-lead package
  - S series: 75 A, 100 A, 140 A and 160 A current ratings

The power four-lead package includes a Kelvin source lead, the effect of which is to produce a substantial reduction in turn-on energy, making for even more efficient switching. onsemi also plans to supply FS7 IGBTs in bare die format.

All FS7 IGBTs have a positive temperature coefficient for easy parallel operation. Every production unit is dynamically tested to give OEMs high confidence in the operation and reliability of the IGBT in their application.

Design engineers who want to evaluate the new FS7 products can request a free sample from Future Electronics, where the large team of power electronics specialists will be pleased to provide advice on deploying these high-performance parts in new designs.

Launch of authentication devices enhances security of cost-sensitive applications

Microchip has introduced six new secure authentication ICs which protect host devices against the risk of counterfeiting, and help to safeguard product users and their data. Competitive costs make these products suitable even for use in disposable products.

Microchip has expanded its portfolio of secure authentication devices with the launch of six new products that meet the requirements of the Common Criteria Joint Interpretation Library (JIL) for High-rated secure key storage. The new devices also support certified algorithms that comply with the US Federal Information Processing Standard (FIPS).

These Microchip secure authentication ICs enable manufacturers to implement trusted authentication to prevent counterfeiting, improve quality control and safeguard the user experience. In particular, designers of cost-sensitive applications that may have had limited or no secure authentication previously can now add this critical function after the launch of these cost-optimized security solutions.

The new ICs include five added to the CryptoAuthentication™ hardware-based secure storage products that keep secret keys hidden from unauthorized attackers:

- **ECC204** performs ECC-P256 signatures and hash-based message authentication code (HMAC)
- **ECC206** supports two-pin parasitic power, ECC-P256 signature and HMAC
- **SHA104** implements a client SHA256 MAC
- **SHA105** implements a host SHA256 CheckMAC
- **SHA106** supports two-pin parasitic power and a client SHA256 MAC

The sixth new product is a CryptoAutomotive™ device: the **TA010** with ECC signature and HMAC is an AEC-Q100 Grade 1-qualified IC that enables OEMs to implement secure authentication into vehicle designs without requiring costly modifications.

The secure authentication ICs are supported by the Trust Platform Design Suite, a dedicated software tool used to onboard the ICs with Microchip's secure key provisioning service. The scalable service enables cryptographic assets to be provisioned for projects of almost any size.

MICROCHIP

FEATURES

- NIST SP 800-90A/B/C random number generator
- Active shield to protect against invasive attacks
- Internal memory encryption and scrambling
- Low and high supply-voltage tampers
- Low- and high-temperature tampers
- FIPS 140-3 compliance-mode configuration option
- Single symmetric secret key
- Single ECC private key

APPLICATIONS

- Disposable consumer devices
- Disposable medical devices
- Automotive accessories
- Industrial accessories
- Wireless charging
- Data centers

FREE DEV BOARD

Socket kit for Microchip CryptoAuthentication ICs.

Orderable Part Number
AT88CKSCKTUDFN-XPRO

APPLY HERE NOW

BUY NOW | DATASHEET | DATASHEET #2 | SAMPLES

ENERGY | INDUSTRIAL | LIGHTING | MEDICAL | TRANSPORT | SECURITY | CONSUMER | TELECOMS

New MCU boosts performance and security in next-generation smart applications

The STM32H563 MCU from STMicroelectronics, which features a 250 MHz Arm® Cortex®-M33 core, features the STM32Trust TEE Secure Manager, a service that makes it easier to implement strong security in connected devices.

STMicroelectronics has introduced the performance-oriented STM32H563 microcontroller which offers the cutting-edge security provided by the STM32Trust TEE Security Manager for smart, connected devices.

The new MCU contains the Cortex-M33, an Arm core that blends high performance with security features and energy efficiency. In the STM32H563 implementation, this core runs at 250 MHz and 375 DMIPS, achieving an EEMBC CoreMark® industry-reference score of 1,023.

The security features of the Cortex-M33 core, which complies with the PSA Certified Level 3 and GlobalPlatform SESIP3 security specifications, include the TrustZone® architecture. Building on this, ST has added a range of its own security features.

For instance, the STM32H5 series of which the STM32H563 and the STM32H573 are part is the first to come with system-on-chip (SoC) security services accessed via an industry-standard applications programming interface. This facility, called STM32Trust TEE Secure Manager, saves developers from writing their own security software code, and provides security services that are developed according to industry best practice. This simplifies development while ensuring effective protection.

The SoC security services provided include isolation, cryptography, key storage, and initial attestation. The new devices also provide pre-provisioning credentials programmed in a secure ST factory for seamless registration to various cloud and OEM servers. Other security features are multi-tenant IP protection, and remote lifecycle management of pre-integrated third-party credentials.

The MCU takes advantage of the advanced 40 nm CMOS process technology developed by ST and from improved on-chip power-conversion circuits to keep power consumption low, even when operating at ambient temperature up to 125°C.

life.augmented

FEATURES

- Memory provision:
  - Up to 2 Mbytes of embedded Flash memory with ECC
  - 640 kbytes of SRAM
  - Flexible external memory controller with up to 16-bit data bus
  - Octo-SPI Flash memory interface
  - Two SD/SDIO/MMC interfaces
- Security features
  - Up to eight configurable SAU regions
  - TrustZone-aware and securable peripherals
  - Flexible life-cycle scheme with secure debug authentication
  - Secure firmware installation
  - Secure firmware upgrade support with TF-M
  - HASH hardware accelerator
  - NIST SP800-90B-compliant true random number generator
  - 96-bit unique ID
- Two 12-bit ADCs
- Two 12-bit DACs
- Digital temperature sensor
- SIL-ready

APPLICATIONS

- Home automation:
  - Air-conditioning systems
  - Home appliances
  - Alarm systems
- Industrial systems:
  - Programmable logic controllers
  - Motor controls
  - Pumps
- Communication gateways
- Lighting controls
- Energy-conversion systems
- Consumer devices:
  - PC peripherals
  - Smartphones
  - Computing accessories

FREE DEV BOARD

STM32 Nucleo-144 development board for STM32H563 MCU supports Arduino, ST Zio and morpho connectivity.

Orderable Part Number
NUCLEO-H563ZI

APPLY HERE NOW

BUY NOW | INFORMATION | DATASHEET | SAMPLES

ENERGY | INDUSTRIAL | LIGHTING | MEDICAL | TRANSPORT | SECURITY | CONSUMER | TELECOMS

Current-limit switches provide comprehensive circuit protection

Vishay SiP32433A/B and SiP32434A/B load switches provide settable limits for over- and under-voltage protection, and block voltage surges and inrush currents over a wide input-voltage range, with either latch off or auto-retry.

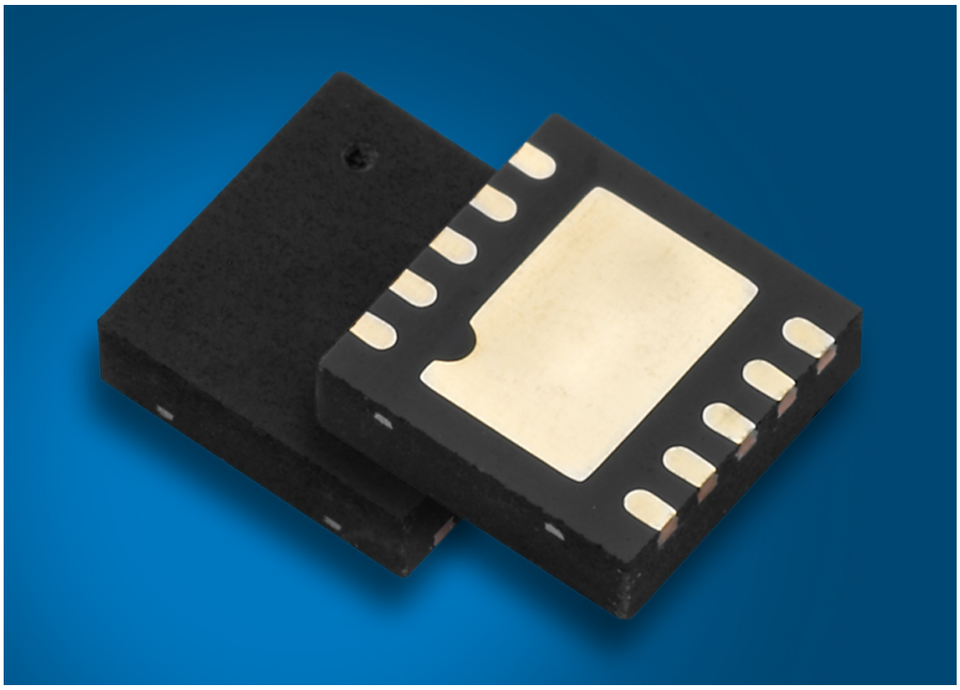

VISHAY

FEATURES

- 28 V maximum voltage with 24 V internal over-voltage protection
- 78 mΩ switch resistance
- Fast response to short circuits
- Programmable turn-on slew rate
- Junction-temperature range: -40°C to 125°C
- Over-temperature protection

APPLICATIONS

- Industrial equipment
- IoT devices
- Smart home devices
- Medical and healthcare equipment
- Networking and telecoms equipment
- Data storage
- Computing equipment
- Programmable logic controllers
- Lighting
- Games consoles

The SiP32433A and SiP32433B from Vishay are single-channel load switches which protect both power sources and downstream circuitry connected to the switch from overloads, short circuits, voltage surges, and excessive inrush currents.

The output-current limit can be set by a single external resistor in a range from 0.3 A to 3.5 A, with an accuracy of ±8%. The rated input-voltage range is 2.8 V to 23 V. Vishay also supplies the SiP32434A and SiP32434B switches, which can be set to limit current in a range between 0.5 A and 6 A, with an accuracy of ±7%. After switching off due to a fault, the SiP32433A and SiP32434A latch the power switch off, while the SiP32433B and SiP32434B auto-retry after a settable period.

The SIP32433 and SiP32434 load switches integrate multiple control and protection features, giving system designers a simple way to control power behavior and maintain reliable operation with only a small number of external components.

Over-voltage protection and under-voltage lockout threshold levels can be set with an external resistor network. Inrush current behavior can be set with a single external soft-start capacitor.

The SiP32433A and SiP32433B feature active reverse blocking, making them ideal for systems with a USB Type-C® Power Delivery power supply or with multiple power-source switching.

BUY NOW | DATASHEET | DATASHEET #2

SAMPLES

New 1 W and 0.5 W-rated dc-dc converters extend appeal of modules in SOIC-16 package

RECOM R05C05TE05S and R05CT05S-R dc-dc converter modules are ideal for applications that operate in light-load mode. Manufacturers will also appreciate the converters' low EMI and attractive cost.

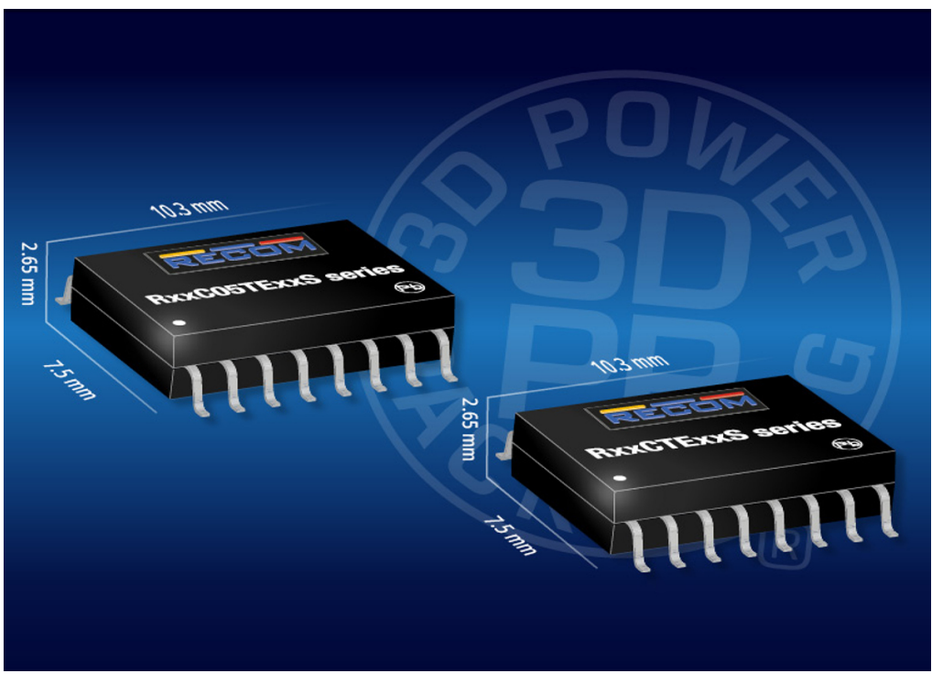

RECOM has extended its range of dc-dc converters housed in a low-profile SOIC-16 package.

The 0.5W-rated R05CT05S-R and 1W-rated R05CTE05S operate from an input-voltage range of 4.5 V to 5.5 V. The R05CT05S-R produces a post-regulated, selectable output of either 5 V or 3.3 V. The R05CTE05S produces a semi-regulated 5 V output.

Line and load regulation figures are specified across the full operating-temperature range of -40°C to 125°C for the R05CTE05S, and -40°C to 140°C for the R05CT05S-R. There is no minimum load requirement, making the parts ideal for applications that operate in light-load mode.

The R05CTE05S has a basic insulation rating of 3 kV ac/1 minute, and provides more than 8 mm of input/output creepage and clearance. Isolation capacitance is just 7 pF. The R05CT05S-R offers reinforced isolation of 5 kV ac/1 minute with a 2 MOPP rating for medical applications.

EMI outputs are particularly low compared to more expensive competing dc-dc converters.

The SOIC-16 package has a footprint of just 10.4 mm x 7.5 mm and a 2.5 mm profile. The R05CTE05S is partially pin-compatible with the R05CT05S, which includes extra features such as remote on/off.

RECOM also supplies a broad portfolio of dc-dc converter modules for higher input-voltage ranges. The RPMGQ-20 and RPMGS-20 are open-frame, non-isolated dc-dc buck converters operating from an 18 V to 75 V input range. They produce optional nominal outputs of 5 V trimmable over a wide range of 3.3 V to 8 V, or 12 V, trimmable between 8 V and 24 V. Rated output current for all variants is 20 A.

RECOM

FEATURES

- Protection functions:
  - Short-circuit
  - Over-current
  - Over-temperature
  - Input under-voltage
- Approvals:
  - CB
  - EN 62368-1
- Three years' warranty

APPLICATIONS

- Isolated COM port power supplies
- Gate drive power supplies
- Current sensing
- Smart metering
- Medical devices
- Programmable logic controllers
- Industrial sensor power supplies

BUY NOW | DATASHEET | DATASHEET #2 | SAMPLES

ENERGY | INDUSTRIAL | LIGHTING | MEDICAL | TRANSPORT | SECURITY | CONSUMER | TELECOMS

New metal inductors provide higher-specification alternative to ferrites

The LSDP family of wirewound metal inductors from TAIYO YUDEN provides power-system designers with a simple way to reduce dc resistance and increase current without occupying more board space.

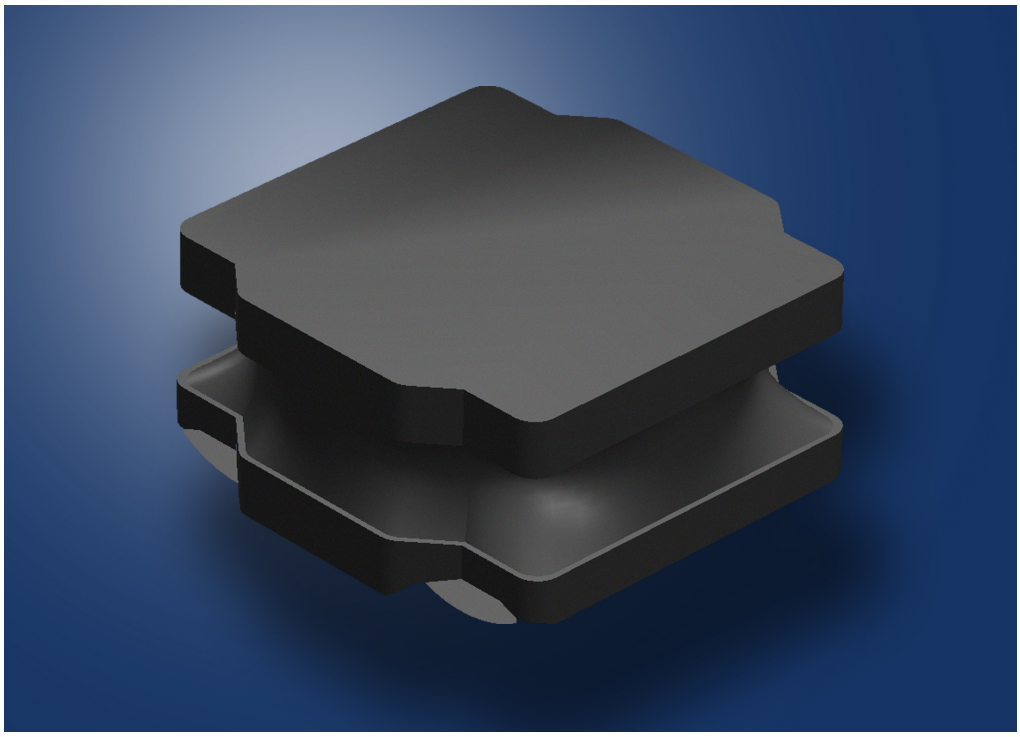

TAIYO YUDEN

FEATURES

- Low dc resistance
- Operating-temperature range: -40°C to 125°C
- ±10% inductance change over temperature range

APPLICATIONS

- Industrial equipment
- Consumer devices

TAIYO YUDEN has introduced the first parts in a family of surface-mount wirewound metal inductors that can provide space savings, handle higher currents and reduce resistance in power-system designs when replacing ferrite inductors with the same footprint.

The new LSDP family metal inductors are available now in a compact package which has a 4 mm x 4 mm footprint, and is 2 mm high. They can be used as a drop-in replacement for TAIYO YUDEN LSXN ferrite inductors with the same footprint. In this case, the LSDP metal inductors provide a 50% higher current capability: 4.5 A versus the ferrite inductor's 3 A. In addition, dc resistance is some 33% lower: 34 mΩ, compared to the ferrite's 50.4 mΩ.

The LSDP metal inductor can also replace an LSXN ferrite inductor in a package that measures 5 mm x 5 mm x 4.1 mm. Maintaining the same specifications for inductance and saturation current, the LSDP metal inductor occupies around 65% less space.

Bluetooth Low Energy MCU provides integrated solution for smart connected devices

The RSL15 Bluetooth Low Energy MCU from onsemi protects connected devices with a comprehensive set of advanced security functions including TrustZone support and root-of-trust.

The RSL15 from onsemi, a secure low-power wireless microcontroller which implements Bluetooth® Low Energy 5.2 networking, provides a complete set of control and connectivity functions for smart devices in industrial and medical applications.

Based on an Arm Cortex -M33 processor core, the RSL15 features built-in power management, a wide supply-voltage range suitable for coin cells, a flexible set of GPIOs, and an extensive set of peripherals. The RSL15 includes 80 kbytes of RAM. The variant supplied in a WLCSP package has 512 kbytes of Flash memory, while the QFN-packaged device has either 284 kbytes or 512 kbytes

The RSL15 is backed by a comprehensive but easy-to-use software development kit (SDK) which includes a cybersecurity platform. It also provides various sample applications which demonstrate key features such as:

- Low-power Smart Sense mode for acquiring sensor data
- Tools for configuring power-management functions
- Bluetooth Low Energy functions
- Ultra low-power sleep modes

onsemi has ensured that connected devices based on the RSL15 are safe from cyber-attack. The RSL15 provides a comprehensive mix of security capabilities, including Arm TrustZone technology, which provides trusted execution environments for at-risk peripherals and functions. The RSL15 also features Arm CryptoCell™-312 technology to provide root-of-trust and additional security mechanisms such as:

- True random number generator
- Standard encryption accelerators
- Support for a wide range of encryption functions, including:
  - AES 128/192/256
  - SHA
  - Public key infrastructure
  - Elliptic curve cryptography
  - Message authentication
- Secure boot embedded in hardware ROM
  - Hardware-based root-of-trust using secrets stored in dedicated hardware
  - Managed life cycle model
- Secure key storage
- Secure debug controlled with certificates

The RSL15 supports capabilities provided by the Bluetooth 5.2 specification, including extended advertising, long range, a data-transmission rate of up to 2 Mbits/s, up to 10 simultaneous connections, and localization through detection of the angle of arrival and angle of departure of wireless transmissions.

The low power consumption of the RSL15 has been verified by the Embedded Microprocessor Benchmark Consortium. The MCU achieved a score of 60.5 on its ULPMark™-CoreMark benchmark in the performance category, the best in its class. On the ULPMark-CoreProfile benchmark, which calculates the deep-sleep efficiency of MCUs, the RSL15 holds second place, only behind the onsemi RSL10 wireless MCU.

onsemi

FEATURES

- Bluetooth Low Energy 5.2 certified:
  - Backwards compatibility with earlier Bluetooth specifications
- 36 nA sleep mode current
- 2.7 mA peak Receive current at 1 Mbit/s
- 4.3 mA peak Transmit current at 0 dBm output power
- -94 dBm sensitivity at 2 Mbits/s data rate
- Configurable output-power range: -17 dBm to +6 dBm
- Supply-voltage range: 1.2 V to 3.6 V

APPLICATIONS

- Industrial automation and sensing
- Connected medical sensors
- Wearable devices
- Asset tracking
- Electronic tags
- Access control
- Electronic labels
- Data loggers
- Smart appliances
- Energy-harvesting switches

FREE DEV BOARD

Evaluation and development board for the RSL15 Bluetooth wireless microcontroller.

Orderable Part Number
RSL15-EVB

APPLY HERE NOW

BUY NOW | DATASHEET | SAMPLES

Robust NOR Flash memory provides secure storage for embedded systems

The SEMPER™ family of NOR Flash memory products from Infineon supports functional safety applications, and gives confidence that sensitive code and data will be stored safely and securely over guaranteed periods up to 25 years.

FEATURES

- IEC 61508 ready
- Endurance flex architecture
  - Up to 25 years' data retention or endurance of more than 1 million cycles
- Diagnostics:
  - SafeBoot
  - Error checking
- Automotive-grade product options

APPLICATIONS

- Automotive systems
- Industrial equipment
- Communications equipment

The SEMPER™ family from Infineon offers a wide range of high-performance, safe, and reliable serial NOR Flash memory products that integrate the essential safety features of many automotive, industrial, and communications applications. Exceeding the automotive industry's quality specifications, the SEMPER NOR Flash memories are ASIL-B compliant and ASIL-D ready for use in functional safety and mission-critical systems.

Part of the Infineon ecosystem of dependable electronics products, the SEMPER portfolio provides safe, secure, and reliable code and data storage capability for embedded systems. The SEMPER NOR Flash memories run error correction code, and provide cyclic redundancy check protection of both the interface and data.

SEMPER products are based on MIRRORBIT™ technology, the world's most advanced NOR Flash process technology. Ideal for high-density devices, the technology stores two bits per cell.

The SEMPER memories are available with capacity ranging from 512 Mbytes to 2 Gbytes, and with a Quad SPI, HYPERBUS™ or octal interface. The products are supplied in versions that operate from a supply voltage of either 3.0 V or 1.8 V. Maximum read speeds are up to 400 Mbytes/s, and the SEMPER memories enable instant-on applications with execute-in-place functionality for direct program execution from long-term storage, instead of code shadowing to RAM.

Infineon backs the SEMPER product range with its guarantee of 10+ years' supply and availability for product platforms that are expected to be on the market for an extended period.

FREE DEV BOARD

Pmod-compatible memory module with SEMPER™ NOR Flash.

Orderable Part Number
EVAL-S25HL512T

APPLY HERE NOW

BUY NOW | INFORMATION | MORE INFO | SAMPLES

ENERGY | INDUSTRIAL | LIGHTING | MEDICAL | TRANSPORT | SECURITY | CONSUMER | TELECOMS

Dual-core microprocessor executes multiple crypto functions at high speed

STMicroelectronics supports the STM32MP157F with a wide range of Linux software and AI development resources. Software expansion packages from ST support applications such as computer vision and predictive maintenance.

The STM32MP157F multi-core microprocessor from STMicroelectronics features high-performance security and computing capabilities combined with power-efficient real-time control and integrated graphics features.

The heterogeneous architecture implemented in the STM32MP157F combines a dual-core 800 MHz Arm® Cortex®-A7 processing unit with a Cortex-M4 microcontroller core. The Cortex-A7 cores are backed by 32 kbytes of L1 cache and 32 kbytes of data cache for each core, and 256 kbytes of unified L2 cache. The processing unit can implement the Arm NEON™ signal processing acceleration technology and TrustZone® secure partitioning technology.

Advanced security capabilities in the STM32MP157, and also in the similar STM32MP131 security-focused MPU, include:

- True random number generator
- Cryptographic acceleration cell
- Secure boot
- Active tamper protection
- Isolation of resources in the Cortex-M4 core.

In addition, the code available from ST for security mechanisms includes the Open Portable Trusted Execution Environment (OP-TEE) and the Trusted Firmware-A (TF-A) projects. This helps developers using the STM32MP1 series processors to address the key elements of information security in their applications: confidentiality, integrity, availability, and authentication.

The STM32MP157F processor, part of the STM32MP1 series, supports a wide range of external memories, including up to 1 Gbyte of DDR SDRAM, and external Flash via a dual-mode quad serial peripheral interface. The combination of a fast processing unit and generous memory provision ensures that the STM32MP157F can handle ST's mainlined open-source Linux® operating system distribution, OpenSTLinux, which contains all the essential building blocks for running software on the application processor cores.

To support development with the high-performance STM32MP1 products, ST provides a broad ecosystem of software packages and support for cutting-edge open-source security initiatives.

ST has also introduced software expansion packages tailored for the STM32MP1 which help designers to deploy artificial intelligence (AI) in computer vision projects and to accelerate the development of predictive maintenance applications. These include X-LINUX-AI, an expansion package which contains AI frameworks and application examples for the Linux operating system to help designers to quickly begin implementing computer vision use cases with STM32 evaluation boards and Discovery kits.

To accelerate development of predictive maintenance applications, the X-LINUX-PREDMNT expansion package helps to implement edge gateway features between sensors and cloud services.

The STPMIC1 from ST provides a ready-made power management solution for the STM32MP1 microprocessors.

life.augmented

FEATURES

- 3D graphics processing unit
- 24-bit LCD-TFT display controller
  - Up to WXGA @ 60 frames/s
  - Up to Full HD @ 30 frames/s
  - Pixel clock up to 90 MHz
  - Two layers with programmable color look-up table
- MIPI® DSI interface:
  - Two data lanes up to 1 Gbit/s each
- Two ADCs up to 16-bit resolution
- Temperature sensor
- Two 12-bit DACs
- Digital filter for sigma-delta modulator

APPLICATIONS

- Industrial systems
- Consumer electronics
- Smart home
- Health and wellness devices

FREE DEV BOARD

Development kit for Arm Cortex-A7-based microprocessor.

Orderable Part Number
STM32MP157F-DK2

APPLY HERE NOW

BUY NOW | INFORMATION | DATASHEET | SAMPLES

ENERGY | INDUSTRIAL | LIGHTING | MEDICAL | TRANSPORT | SECURITY | CONSUMER | TELECOMS

Energy-harvesting PMIC provides complete power solution for low-voltage devices

The Nexperia NEH2000BY includes software for maximizing the power harvested from photovoltaic cells. Fully integrated including a boost dc-dc converter, the NEH2000BY simplifies the design of energy-harvesting systems, and saves space and BoM cost.

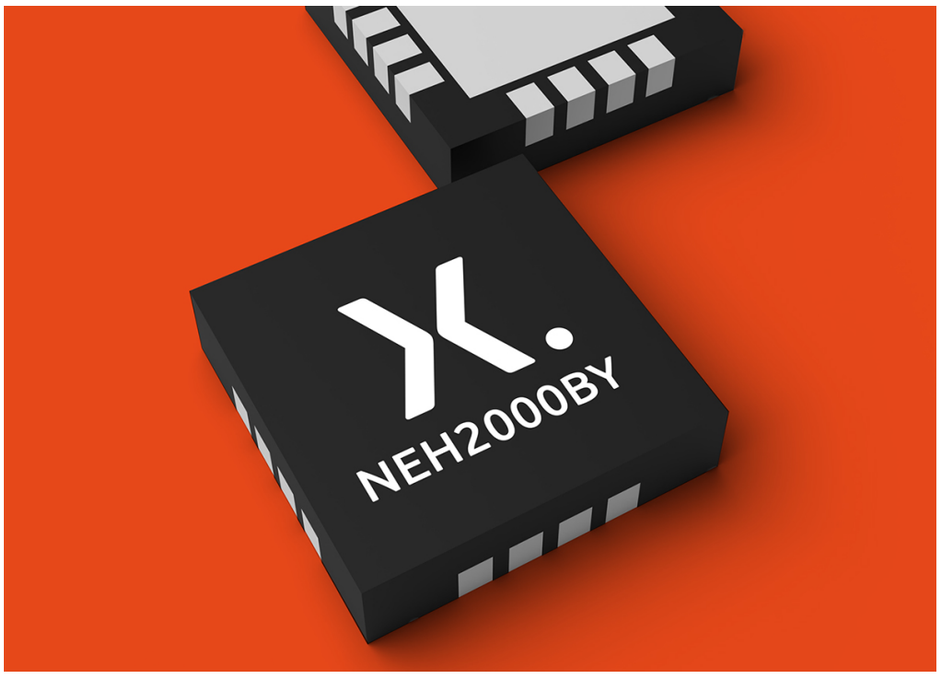

nexperia

FEATURES

- Efficient boost dc-dc converter with 1:2 output ratio
- Compatible with various types of rechargeable batteries
- 625 nA standby current
- Operating-temperature range: -40°C to 85°C

APPLICATIONS

- Wireless IoT devices
- Smart remote controls
- Electronic shelf labels
- Wearable devices
- Industrial and environmental monitoring equipment
- Consumer electronics
- Beacons

Nexperia has introduced the NEH2000BY, a high-performance power management IC (PMIC) which recharges a battery or storage capacitor using energy harvested from ambient sources such as light. The NEH2000BY enables manufacturers to develop electronic devices that have longer battery life, or are even entirely self-powered.

Energy harvesting via the NEH2000BY also helps to reduce the environmental impact of the billions of batteries produced and discarded every year.

The Nexperia PMIC provides a complete solution for supplying an electronic device from a harvested power source of between 35 µW and 2 mW. Because power conversion operations are integrated inside this single device, engineers can realize designs as much as 20 times smaller than competing solutions. The NEH2000BY requires no external inductor, and only a few external components. The board footprint of a typical power system based on the NEH2000BY is just 12 mm². The device also reduces bill-of-materials cost substantially.

The NEH2000BY includes an on-chip maximum power point tracking (MPPT) adaptive algorithm for optimizing energy transfer as the harvested power input fluctuates. The MPPT algorithm is fast – it responds to environmental changes in less than 1 second. Conversion efficiency is up to 80%.

With its boost capability and power range, the NEH2000BY is optimized for solar energy harvesting, but can also be integrated in designs with other technologies, such as thermoelectric generator or RF energy harvesting.

The NEH2000BY is supplied in a 16-lead, 3 mm x 3 mm QFN package.

FREE DEV BOARD

Convenient platform for evaluation of NEH2000BY energy-harvesting PMIC.

Orderable Part Number
NEH2000BY

APPLY HERE NOW

BUY NOW | INFORMATION | DATASHEET | SAMPLES

ENERGY | INDUSTRIAL | LIGHTING | MEDICAL | TRANSPORT | SECURITY | CONSUMER | TELECOMS

Compact new load switch provides comprehensive protection functions

The Littelfuse LS0504EDD12 load switch has low on-resistance and low shut-down current, making it ideal for use in battery-powered systems such as wearable devices and wireless headsets.

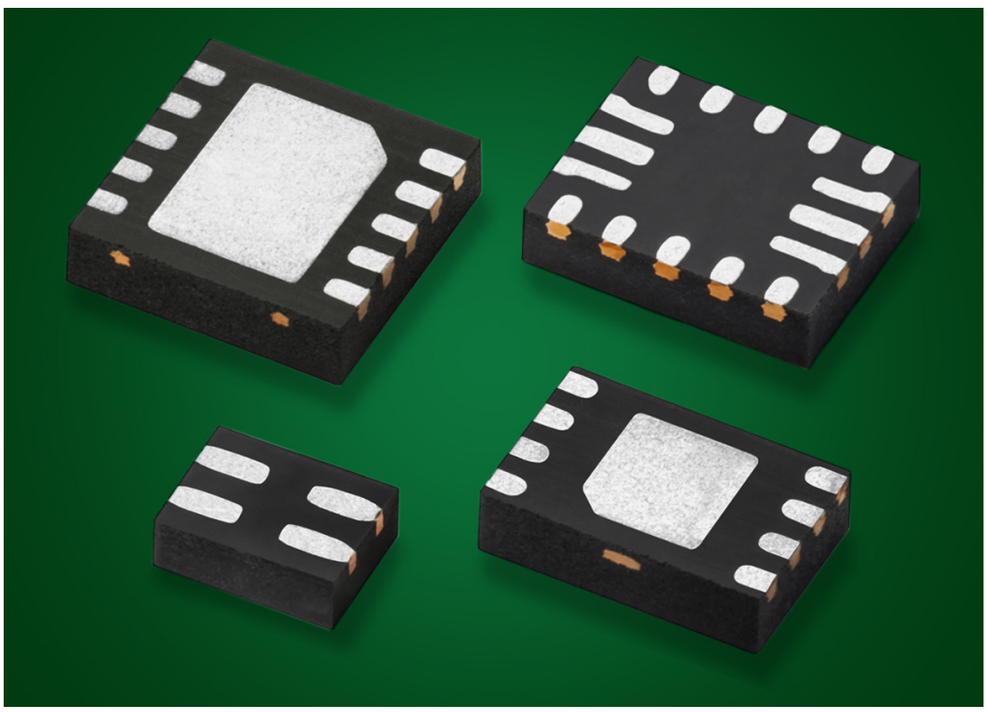

Littelfuse®
Expertise Applied | Answers Delivered

FEATURES

- Input-voltage range: 1.8 V to 5.5 V
- 4 A maximum continuous current
- DFN package with 1.6 mm x 1.2 mm footprint

APPLICATIONS

- Bluetooth headsets
- Wearable devices
- Tablet PCs
- Battery-powered devices
- IoT devices

The Littelfuse LS0504EDD12 is a compact load switch which provides circuits with protection against over-current, over-voltage, over-temperature events, as well as limiting inrush current.

Featuring low on-resistance of 26 mΩ and low shut-down current, the LS0504EDD12 is ideal for applications that require both robust protection and low power consumption.

The LS0504EDD12 provides an accurate 1.2 V enable threshold that allows designers to set the under-voltage lockout (UVLO) limit through an external resistor-divider network. It has a built-in 8 Ω resistor for quick output discharge when disabled.

Other new additions to the Littelfuse portfolio of protection ICs are:

- LS12052BD33 series – 18 V/5 A-rated, provides over-voltage protection and blocking FET control
- LS2405IDD23 series – 24 V/5 A-rated. Diode has very low forward voltage
- LS24062RQ23 series – 28 V/6 A-rated bi-directional eFuse with dual-port independent limit setting

Introducing Littelfuse protection ICs, at:
https://info.littelfuse.com/hubfs/Electronics/Videos/Littelfuse_Protection_IC_group_video.mp

32-bit MCUs feature advanced security capabilities for IoT devices

Renesas RA6M5 Group microcontrollers, which can operate as a secure element, support applications that require secure over-the-air updating thanks to their cryptography accelerators, resistance to cyber-attack, and memory block-swap feature.

The RA6M5 Group microcontrollers, part of the Renesas RA6 series of microcontrollers, provide a wide array of security and communications functions to facilitate in-the-field secure software updating of IoT devices.

The RA6M5 MCUs employ a 200 MHz Arm® Cortex®-M33 core, which provides strong security capabilities including Arm TrustZone® secure partitioning technology. The MCUs also feature the Renesas Secure Crypto Engine, which incorporates multiple symmetric and asymmetric cryptography accelerators, advanced key management, security lifecycle management, resistance to power analysis, and tamper detection.

These RA6M5 Group MCUs offer the same security features and software support as the Renesas RA6M4 MCUs, which have achieved PSA Level 2 and SESIP 1 certifications. This combination of features enables OEMs to use these MCUs to realize secure element functionality.

As well as scoring highly on security, these MCUs provide a rich set of high-speed communications capabilities, including CAN FD, an Ethernet controller with direct memory access, Full-Speed and High-Speed USB, and multiple serial interfaces.

The MCUs also provide great flexibility and capacity to store and access code and data. Integrating up to 2 Mbytes of Flash memory and 512 kbytes of RAM, including 64 kbytes with error correction code, the RA6M5 MCUs also provide an OctaSPI interface which enables designers to extend the on-chip resources with access to external Flash memory.

The memory block-swap feature, as well as strong security, make the RA6M5 Group MCUs the best choice for applications in which in-the-field firmware updates will be installed. After new firmware is written to Flash in the background, a selectable number of 32 kbyte Flash blocks can be swapped to run the new code.

The RA6M5 Group is supported by an easy-to-use Flexible Software Package (FSP), which includes a best-in-class Hardware Abstraction Layer (HAL) driver. The FSP uses a GUI to simplify the development process, while also making it easy for product manufacturers to transfer functions from an original 8- or 16-bit MCU-based design.

RENESAS

FEATURES

- 107 µA/MHz current in active mode
- 30 µs wake-up time
- Capacitive touch-sensing unit
- Two ADCs
- SPI/ I2C multimaster interface

APPLICATIONS

- Wired Ethernet systems
- Fire alarm systems
- Intruder detection
- Security panel control
- Metering
- Robotics
- Door openers
- Sewing machines
- Vending machines
- Uninterruptible power supplies
- HVAC systems

FREE DEV BOARD

Evaluation kit for RA6M5 Group microcontrollers.

Orderable Part Number
EK-RA6M5

APPLY HERE NOW

BUY NOW | INFORMATION | DATASHEET | SAMPLES

ENERGY | INDUSTRIAL | LIGHTING | MEDICAL | TRANSPORT | SECURITY | CONSUMER | TELECOMS

Security framework for STM32 MCUs and MPUs for protecting embedded devices

STM32Trust platform from STMicroelectronics provides hardware products, software projects, tools and training to enable OEMs to build strong security into connected products, from design through production to onboarding with popular cloud computing services.

life.augmented

STMicroelectronics has implemented a comprehensive framework, called STM32Trust, that enables system developers to implement strong security protection functions in embedded devices, and to comply with new and emerging security regulations.

The security implementations developed by ST are graduated to fit with the different requirements of the various industry standards governing security technology, and so to provide manufacturers with a scalable approach. STM32Trust relies on several security certification schemes to give OEMs confidence in its security implementations, including:

- Platform Security Assurance (PSA), an Arm® project
- Security Evaluation Standard for IoT Platforms (SESIP), defined by GlobalPlatform
- In addition, the STSAFE secure elements supported by STM32Trust are Common Criteria Evaluation Assurance Level (EAL) 5+ certified

This assurance level allows designers to use the security framework with confidence, and to meet the application requirements of security standards such as PCI, UL-2900, IEC 62443, ETSI EN 303 645, FIPS-140-2, and IoXT.

The STM32Trust framework provides developers with a robust, multi-level solution for enhancing security in their new product designs. It is for implementation on STM32 microcontrollers and microprocessors, in combination with STSAFE secure elements. The framework helps OEMs to implement 12 security functions:

- Secure boot
- Secure installation/update
- Silicon device lifecycle management
- Isolation of trusted from non-trusted parts of a system
- Secure storage of data and keys
- Cryptography engine
- Secure manufacturing
- Identification/authentication/attestation
- Software IP protection
- Abnormal situation handling
- Audit/log of security events
- Application lifecycle management

To support these functions, STM32Trust offers a range of security services that are constantly evolving to make security protection easier to implement. These services include:

- Secure boot and secure firmware installation, in tandem with the STM32CubeProgrammer and the STM32HSM hardware security module
- Cryptography
- Trust Execution Environment (TEE) Secure Manager
- Trusted Firmware for Microcontrollers (TF-M) open-source software project
- Trusted Firmware for Applications Processors (TF-A) open-source software project
- Open Portable Trusted Execution Environment (OP-TEE)

More information about the STM32Trust framework can be found at www.st.com/content/st_com/en/ecosystems/stm32trust.html

10110 DATASHEET

Coming Soon: New Bluetooth Low Energy module provides strong set of security protection features

Highly integrated PAN1783 wireless module from Panasonic guards the integrity of code, data and privacy with cryptographic hardware, secure hardware partitioning, secure key storage, and a root-of-trust.

Panasonic INDUSTRY

FEATURES

- Software development kit: nRF Connect supplied by Nordic Semiconductor
- RF approvals:
  - CE RED
  - FCC
  - ISED
  - UKCA
- Operating-temperature range: -40°C to 85°C

APPLICATIONS

- Computer peripherals and I/O devices
- Wearable devices
- Wireless audio devices

Panasonic is releasing the PAN1783, a new Bluetooth® 5.3 Low Energy (LE) module which integrates a comprehensive set of protection functions for securing wireless communications against intrusion or attack.

The PAN1783 is based on the Nordic Semiconductor nRF5340 Bluetooth system-on-chip (SoC). This SoC features dual Arm® Cortex® -M33 cores, one operating as an application processor at up to 128 MHz with 1 Mbyte of Flash memory, and the other as a network processor operating at 64 MHz with 256 kbytes of Flash. This processing capability means that the PAN1783 can easily be used in stand-alone mode, eliminating the need for an external processor or microcontroller.

Arm has loaded the Cortex-M33 cores with a rich set of security capabilities, such as a root-of-trust and secure key storage. In addition, Arm TrustZone® technology provides trusted execution by providing hardware isolation between secure and non-secure Flash, RAM, peripherals and GPIOs. The state-of-the-art Arm CryptoCell-312 provides hardware-accelerated cryptography. The module also offers a key management unit.

The PAN1783, which complies with the specifications of the Bluetooth 5.3 standard, features isochronous channels and LE audio capability. Throughput is up to 2 Mbits/s. Other advanced Bluetooth features include advertising extensions, long range, and very low power consumption. The PAN1783 also supports angle of arrival (AoA) and angle of departure (AoD) direction-finding using Bluetooth signals.

The PAN1783 supports Type 2 NFC-A operation for use in simplified pairing and payment solutions via an external antenna.

The PAN1783 is available in two versions:

- The part number ENW89860A1KF has an integrated chip antenna
- The part number ENW89860C1KF has a bottom pad for connection of an external antenna

SAMPLES

Optically isolated MOSFET gate driver features fast turn-off circuit

Compact VOMDA1271 from Vishay is easy to integrate into high-voltage automotive applications such as electric vehicle battery management systems while maintaining high isolation. The driver can be controlled directly by a microcontroller.

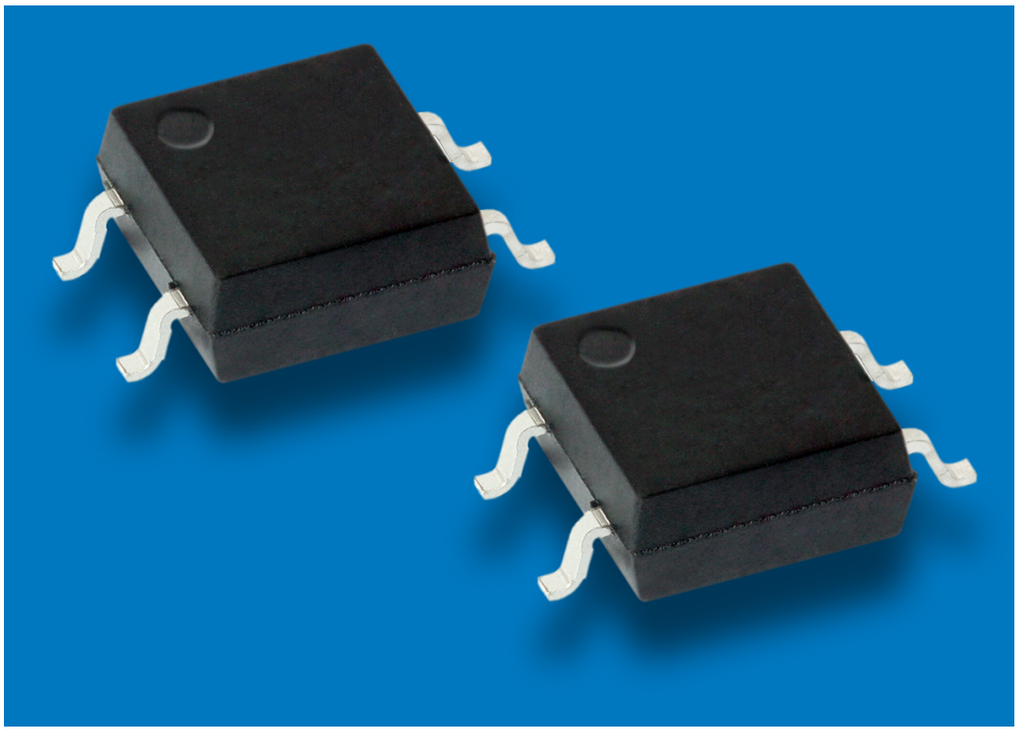

VISHAY

FEATURES

- AEC-Q102 qualified
- 8.5 V open-circuit voltage at 10 mA forward current
- 15 µA short-circuit current at 10 mA forward current
- 3,750 Vrms isolation rating
- Operating-temperature range: -40°C to 125°C
- Pending approvals:
  - UL
  - cUL
  - VDE
  - CQC

APPLICATIONS

- Automotive pre-charge relays
- Custom solid-state relays
- Battery chargers
- Battery management systems

The VOMDA1271 from Vishay is an optically isolated MOSFET driver for high-voltage silicon MOSFETs in automotive applications. The device can also be used to drive silicon carbide (SiC) MOSFETs.

The driver has an integrated turn-off circuit that produces very fast MOSFET turn-off times. Typical turn-on time is 32 µs and turn-off time is 71 µs.

No power supply is needed to power the VOMDA1271's internal circuitry, as it harvests the power it requires from the infrared radiation on the low-voltage, primary side of the isolation barrier. The driver can be controlled directly by the output from a microcontroller.

The VOMDA1271 is housed in a SOP-4 package which measures 4.92 mm x 4.57 mm x 2.12 mm.

BUY NOW | INFORMATION | DATASHEET | SAMPLES

ENERGY | INDUSTRIAL | LIGHTING | MEDICAL | TRANSPORT | SECURITY | CONSUMER | TELECOMS

USB Type-C connectors provide robust operation and long-term reliability

Global Connector Technology produces various USB Type-C connectors that are rated for 20,000 mating cycles. The family includes products that support the new 240 W capability in the USB Power Delivery standard.

Global Connector Technology (GCT) supplies a family of 6-, 16-, and 24-pin USB Type-C connectors that are ideal for applications requiring long-term reliability.

These USB Type-C connectors are rated for 20,000 mating cycles, which is twice the requirement specified by the industry standard.

The 6-pin variants are cost-effective connectors suitable for applications that require power only, and no USB data-transfer functionality. The 16-pin connectors are for USB 2.0 systems. The 24-pin variants support full USB 3.2 Gen2 functionality.

The GCT connectors are available in horizontal, vertical and flag mounting options. Most parts have multiple shell stakes to ensure strong retention to the PCB.

USB Type-C® and USB-C® are registered trademarks of USB Implementers Forum.

Part Number	Pin Count and Connector Configuration	Mounting Arrangement
USB4081-03-A	24-pin horizontal	Surface-mount contacts, 1.60 mm through-hole shell stakes
USB4085-GF-A	16-pin horizontal	Through-hole contacts, 2.10 mm through-hole shell stakes
USB4105-GF-A	16-pin horizontal	Surface-mount contacts, 0.95 mm through-hole shell stakes
USB4105-GF-A-060	16-pin horizontal	Surface-mount contacts, 0.60 mm through-hole shell stakes
USB4105-GF-A-120	16-pin horizontal	Surface-mount contacts, 1.20 mm through-hole shell stakes
USB4125-GF-A	6-pin horizontal	Surface-mount contacts, 1.00 mm through-hole shell stakes
USB4125-GF-A-0190	6-pin horizontal	Surface-mount contacts, 1.90 mm through-hole shell stakes
USB4135-GF-A	6-pin horizontal	Fully surface-mount
USB4140-GF-0070-C	6-pin vertical	Surface-mount contacts, 0.70 mm through-hole shell stakes
USB4140-GF-0170-C	6-pin vertical	Surface-mount contacts, 1.70 mm through-hole shell stakes
USB4140-GF-0230-C	6-pin vertical	Surface-mount contacts, 2.30 mm through-hole shell stakes
USB4145-03-0070-C	16-pin vertical	Surface-mount contacts, 0.70 mm through-hole shell stakes
USB4145-03-0170-C	16-pin vertical	Surface-mount contacts, 1.70 mm through-hole shell stakes
USB4145-03-0230-C	16-pin vertical	Surface-mount contacts, 2.30 mm through-hole shell stakes
USB4160-03-0070-C	24-pin vertical	Surface-mount contacts, 0.70 mm through-hole shell stakes
USB4160-03-0170-C	24-pin vertical	Surface-mount contacts, 1.70 mm through-hole shell stakes
USB4160-03-0230-C	24-pin vertical	Surface-mount contacts, 2.30 mm through-hole shell stakes
USB4175-GF-0160-C	6-pin extended-height vertical	Surface-mount contacts, 1.60mm through-hole shell stakes
USB4175-GF-0230-C	6-pin extended-height vertical	Surface-mount contacts, 2.30mm through-hole shell stakes
USB4200-03-A	24-pin flag type	Surface-mount contacts, 1.70 mm through-hole shell stakes

GCT

FEATURES

- USB4081, USB4085, USB4105, USB4145, USB4160 and USB4200 feature 240 W power rating for USB Power Delivery applications
- USB4105, USB4125, USB4140, USB4145, USB4160 and USB4175 available with multiple shell stake length options

APPLICATIONS

- Consumer electronics
- Industrial equipment